AKRON

User's Manual

OPERATION, MAINTENANCE AND SPARE PARTS

AKRON

GRAIN BAGGING MACHINE

E 9400 D

User's Manual

Operation, Maintenance and Spare Parts

Code: 125040

Edition: November 2011

Review: 2011/001

Due to the continuing improvements in the design and manufacture of ***AKRON®*** products, **MICRÓN FRESAR S.R.L.** reserves the right to modify components and/or specifications without prior notice.

1. INTRODUCTION

This user's manual describes the functions and components of the ***AKRON®*** model **E 9400 D** bagging machine. The machine's operation and maintenance instructions are detailed here, as well as the necessary safety recommendations. The information provided in this manual is fundamental for the efficient and safe operation of the machine. This documentation is included in order to guarantee its optimal operation. This is why this manual should be available at all times either together with the machine or at least within the operators' and supervisors' reach.

1-a. The Purpose of the Machine

The ***AKRON®*** **E 9400 D** bagging machine is a state-of-the-art machine for storing grain in plastic silo bags according to cutting-edge trends in this type of operations. This particular model "D" design enables the machine to be completely dismantled in order to minimize its volume for transport between countries.

The machine's simple design concept reduces its maintenance requirements to a minimum and guarantees its optimum operation under a variety of conditions. However, it must be noted that this bagging machine has been designed exclusively for routine farm duties and that the guarantee will be valid only as long as the machine is used respecting the operation procedures described in the present manual.

For operating this machine and for any maintenance tasks or repairs, the instructions given in the present manual and in any other documentation supplied by the manufacturer must be followed. Special attention must be paid to safety precautions and recommendations, and to comply with all the pertinent local Occupational Health & Safety laws in force.

Any arbitrary modification carried out on the machine or its components will release the manufacturer from any responsibility arising from damage or injury that may occur as a result of such modification.

2. INDEX

1. INTRODUCTION 3
1-a The Purpose of the Machine 3

2. INDEX 5

3. SAFETY 7
3-a Attitude Toward Safety 7
3-b “ATTENTION” Symbol and Signal Words 7
3-c Personal Protective Equipment 7
3-d Safety Warnings 7
3-e Risk Analysis 7

4. RECEIVING THE MACHINE 11
4-a Identification of your Bagging Machine 11
4-b Contact Information 11
4-c General Comments on Grain Storage in grain bags 12
4-d Operation Principles 12

5. PREPARATION AND SETUP 13
5.a Recommendations to Ease Subsequent Extraction 13
5.b Prior Checks in the Field 13
5.c Prior Checks on the Machine 13
5.d Machine Parking 13
5.e Machine Positioning 14
5-f. Adjusting the brake system. 15
5.g Graing Bag Preparation and Mounting 15
5.h Final Adjustments Before starting tha Bagging 18

6. BAGGING PROCEDURE 19
6-a Operation Start-Up 19
6-b Operation Parameters 20
6-c Protection Against Overloads 20
6-d Interruptions During Bagging 20
6-e Operation at the End of the Grain Bag 21
6-f Closing the Grain Bag 21

7. MAINTENANCE 23
7-a Maintenance Schedule 23
7-b Maintenance after Receiving the Machine 24
7-c Lubrication 24
7-d Replacement of Parts Subject to Wear 24
7-e Brake Fluid 24
7-f Prevention of Wearing on Flexible Pipes 24
7-g Tire Change 25

8. MACHINE TRANSPORTATION AND STORAGE 27
8-a Preparation of the Machine for Transportation 27
8-b Transportation 27
8-c Machine Storage 28

9. SPECIFICATIONS 29
9-a List of Main Components 29

10. PRODUCT DISMANTLING AND DISPOSAL 31

11. GUARANTEE TERMS 33

12. ALPHABETICAL INDEX 35

13. SPARE PARTS LIST 37
13-a Information for Obtaining Spare Parts 37

14. PARTS SUBJECT TO NORMAL WEAR AND TEAR 59

15. USER'S NOTES 61

3. SAFETY

Even though the machine's operation is simple and safe, it is essential that all bagging machine operators and supervisors read this user's manual and have an in-depth knowledge of its contents. In this way, situations of danger will be avoided for the operator, for third parties and for any goods in the surrounding area.

There must be a written record of when the operators are trained in every detail of the machine-'s operation.

3-a. Attitude Toward Safety

Just as with the operation of any other machine, what is most important for preventing accidents of any kind is the positive attitude of operators and supervisors toward safety. As well as observing the manufacturer's recommendations, the habit must be developed of foreseeing and analyzing every possible contingency that could arise during the operation of the machine. Even though it is impossible to foresee all possible situations, this habit helps to prevent the large majority of hazardous situations.

3-b. "ATTENTION" Symbol and Signal Words

Throughout the present manual, the "Attention" symbol is used to indicate risk situations for the operator, the machine, other equipment or other people.

This symbol will appear together with certain signal words depending on the relative seriousness of each risk situation.

DANGER: This identifies an imminent hazardous situation whose consequences may cause death or serious injuries if not avoided.

WARNING: This identifies a potential hazardous situation whose consequences may cause death or slight to moderate injuries if not avoided.

IMPORTANT: This describes a particular situation where the machine could be damaged or its normal operation could be affected.

3-c. Personal Protective Equipment

Micrón Fresar S.R.L. recommends the use of the following Personal Protective Equipment in order to avoid any possible injury:

Situation	Personal Protective Equipment		
Tractor driver	✓	✓	
Machine operator	✓	✓	✓

3-d. Safety Warnings

On different parts of the machine and on its accessories you will find decals with accident prevention symbols, which must be considered as part and extension of the instructions detailed in this manual. Special care must be taken to ensure these decals are present and legible during the entire working life of the machine.

If for any reason any of these gets lost or becomes illegible through wear, it is important to replace it immediately indicating its corresponding code. To ask for a replacement decal, please contact either the manufacturer using the information given in 4-b. "Contact information", or your local Technical Representative.

3-e. Risk Analysis

The risk situations that typically arise during the operation of this machine are detailed below. Recommendations are made that are of vital importance for the safety of the machine operators, of other workers nearby, and the machine itself.

The pictograms used are taken from IRAM standard 8075 "Tractors, agricultural and forestry and green space maintenance machinery - Safety signs and hazard pictograms - General principles and features". For more details, their location on the machine is shown in the following picture.

DECALS				
#	IMAGE	CODE	NAME	QTY
1		114138	*Risk situations:* • During machine transport *Particular recommendations:* • When transporting the bagging machine, stay below its speed limit for safety reasons.	1
2		114200	*Risk situations:* • During machine transport • During bagging operation *Particular recommendations:* • Never stand or travel on the machine's structure.	1
3		114181	*Risk situations:* • During bagging operation *Particular recommendations:* • Keep a safe distance from the machine.	1
4		016135	*Risk situations:* • When operating the machine *Particular recommendations:* • Observe the warnings indicated in the pictogram in order to avoid accidents	1
5		114112	*Risk situations:* • When operating the machine or performing maintenance tasks *Particular recommendations:* • Carefully read the operator's manual so as to become acquainted with its features and operation.	1
6		114122	*Risk situations::* • During grain bag preparation • When performing maintenance tasks *Particular recommendations:* • Stop the motor and remove the key before performing setup or maintenance tasks.	1
7		NOTICE	Safety decals	1
8	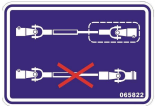	065822	Cardan coupling position	1
9		114152	*Risk situations::* • During bagging operation *Particular recommendations:* • Do not open or take away the safety protections while the motor is running.	1
10		114290	Identification plate	1
11		114128	Maximum 540 RPM	1
12		114187	*Risk situations:* • While uncoupling the machine from the tractor, the towbar lifts abruptly. *Particular recommendations:* • Observe the pictogram's indications by installing the support leg before uncoupling the machine.	1
13		114162	*Risk situations:* • During bagging operation *Particular recommendations:* • Do not stand within reach of the auger or introduce your hand while the motor is running.	1

#	IMAGE	CODE	NAME	QTY
14		114132	*Risk situations:* • During machine positioning • During bagging operation *Particular recommendations:* • Never use the driveshaft without its protector. • Never cross over the driveshaft while it is coupled. • Use, maintain or repair the coupling according to the manual's indications.	1
15		126750	*Risk situations:* • When parking the machine on a slope *Particular recommendations:* • Apply the brake to prevent the machine from moving.	1
16		114158	Maintenance	1
17		180109	Hydraulic Brakes	1
18		014184	Hanger moving direction	1
19		026315	Support leg	1
20		182120	Lifting jack	2
21	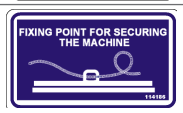	135102	Tying for transport	2
22		026220	Left crank	1
23		026221	Right crank	1
24		035109	Pump hidraulyc	1
25		126223	Braking adjustment	1
26		126224	Risk of accident or injuries	1
27	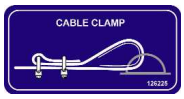	126225	Cable Camp	1
28		126226	lock	1

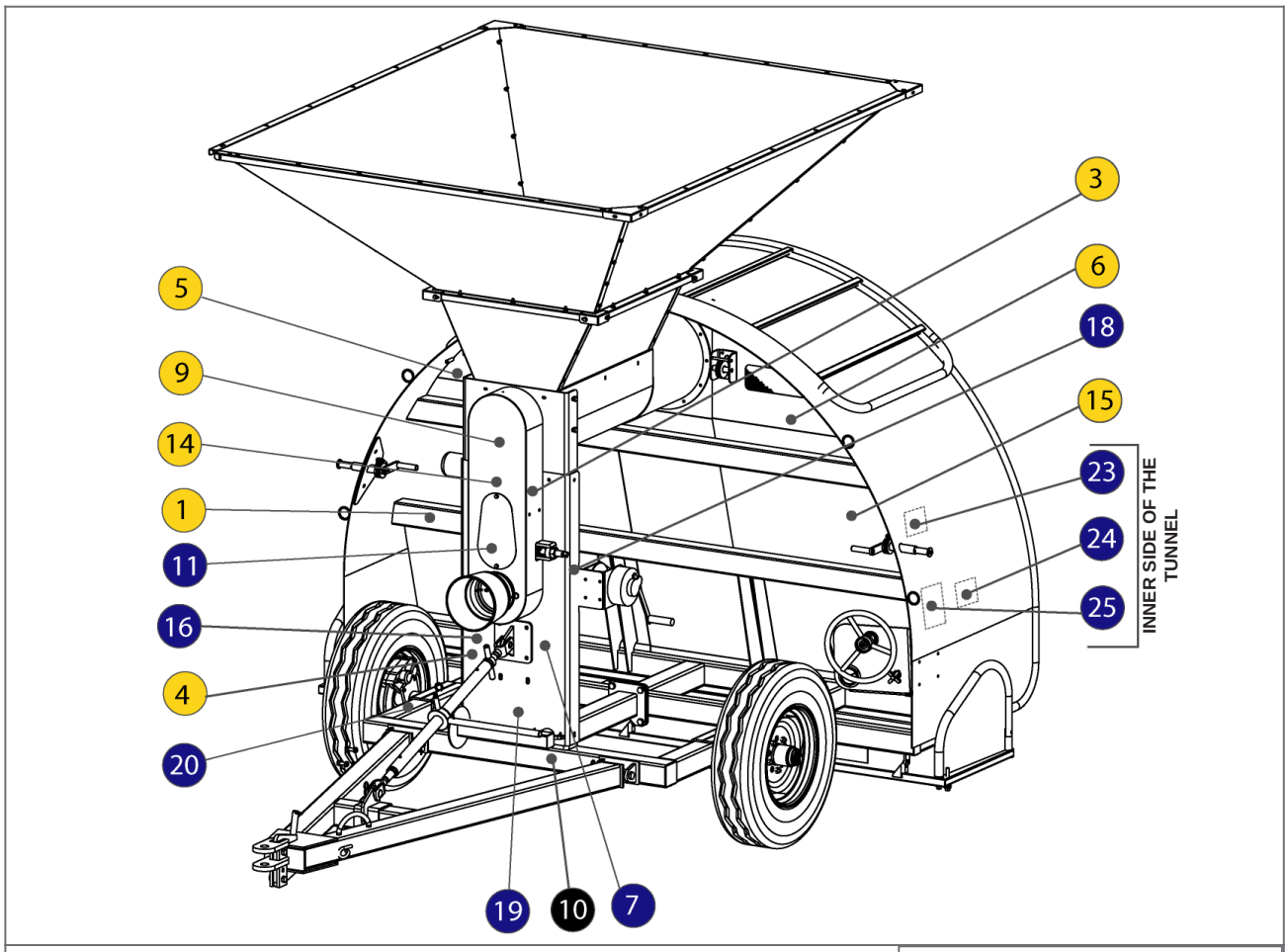
3
6
18
15
23
24
25
INNER SIDE OF THE TUNNEL
5
9
14
1
11
16
4
20
19
10
7

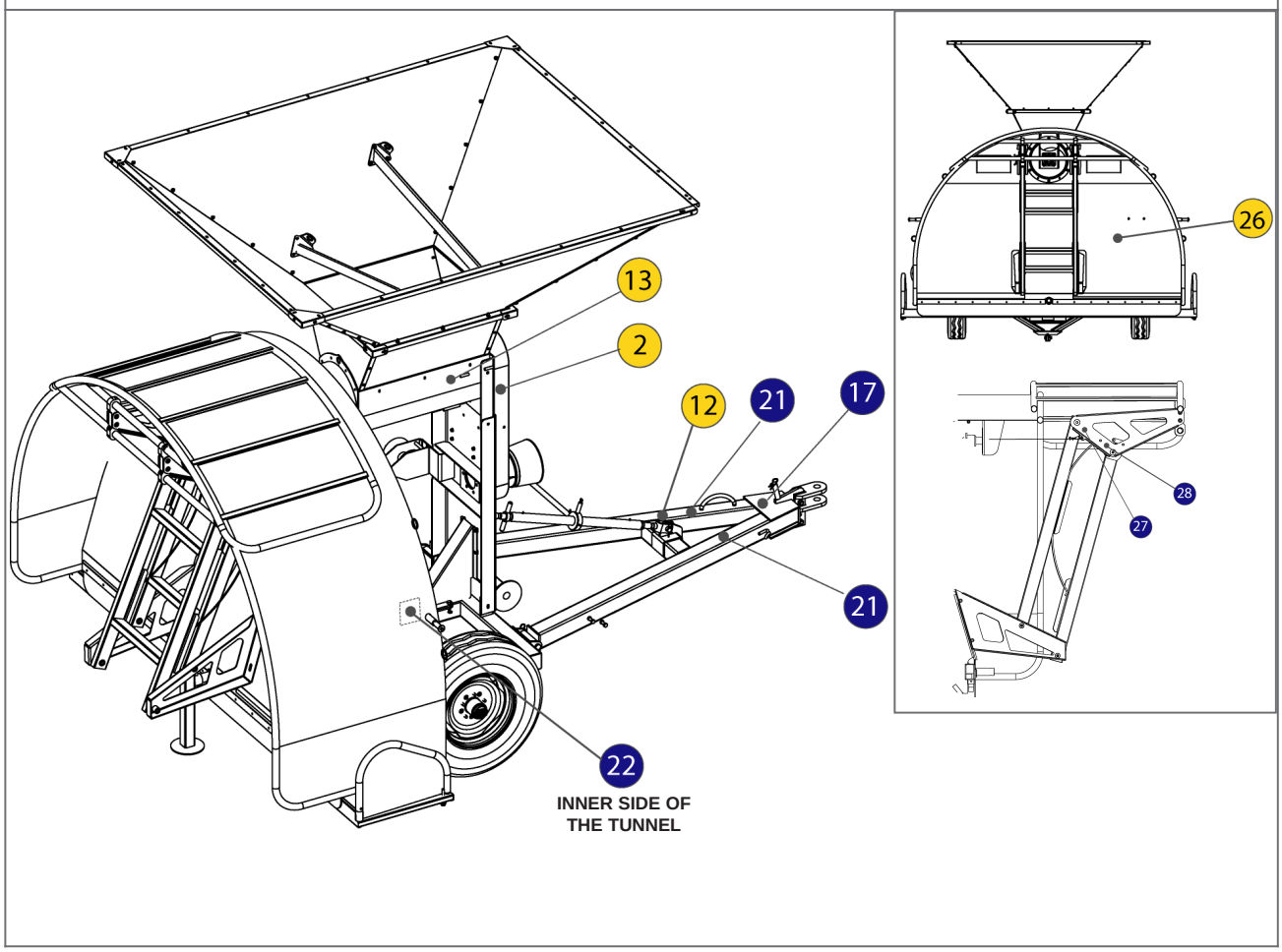
13
2
12
21
17
21
22
INNER SIDE OF THE TUNNEL
26
28
27

4. RECEIVING THE MACHINE

The ***AKRON*® E 9400 D** grain bagging machine is delivered almost ready for operation. Only a number of checks about issues related to transport must be made upon receiving the machine:

1) If the machine is delivered on a truck or similar vehicle, check that all the slings and elements used to fix the machine to the transport are removed.

2) Check that the tire pressure is at the values recommended in section 7. “Maintenance”.

3) Check that all the main machine components are present and in good condition. The spare parts list included at the end of this manual makes a good checklist.

4) All the safety guards and protections should be present and in good condition (e.g., the transmission cover on the tractor side, the driveshaft cover, etc.).

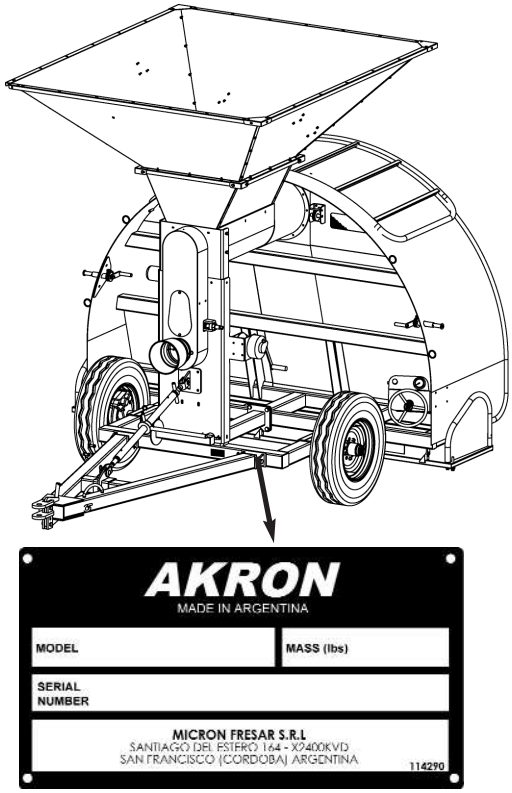

Figure 4.1Identification plate location.

4-a. Identification of your Bagging Machine

When ordering replacement parts or requesting technical assistance or information, always provide the following details for product identification purposes:

- Model
- Mass (kg)
- Serial #

This information is engraved on the identification plate located on the wheel chassis.

Please fill in your machine’s data here for your records:

NOTE: The data, specifications and illustrations in this manual are based on the information available at the time it was written.

MODEL:

MASS (kg):

SERIAL #:

Due to the continuing improvements in the design and manufacture of ***AKRON*®** products, **MICRÓN FRESAR S.R.L.** reserves the right to modify components and/or specifications without prior notice.

Figures are only for illustration purposes, no measures should be taken on the drawings.

4-d. Contact Information

Should you need any further explanation regarding the contents of this manual, please contact us:

Micrón Fresar S.R.L.

Rosario de Santa Fe 2256

X2400EFN - San Francisco (Córdoba)

ARGENTINA

Tel.: ++54 3564 435900 (rollover lines)

Toll free 0 800 333 8300 (in Argentina)

E-mail: export@akron.com.ar

www.akron.com.ar

4-c. General Comments on Grain Storage in grain bags

The storage of dry grain in grain bags is a common practice among farmers, who see it as a flexible and economical system for keeping their grains, eliminating significant product commercialization costs associated with third party storage.

However, the effectiveness of this storage system largely depends not only on monitoring the condition of the grain inside the grain bag but also on the procedure used when bagging the product. This is why this manual includes various guidelines for working based on experience gathered from many farmers. Safety precautions are also included, based on analyses carried out according to current safety laws for agricultural machinery of this type.

It is most important then to respect both the order and the details of all the operations explained, since the success of the bagging operation in itself depends on this, as well as the maintenance of adequate safety conditions for the operators and all the equipment associated with the bagging operation.

It is the responsibility of the user to study this operations and maintenance manual, paying special attention to all the warnings included in each section and to the contents of section 3. “Safety”.

4-d. Operation Principles

The dry grain to be bagged, which is usually provided by a self-unloading grain cart, enters the bagging machine via its upper hopper; and an auger conveys it to the inside of the grain bag. The auger is driven by the PTO of a towing tractor which moves forward coupled to the bagging machine.

The grain exerts pressure on an inclined plane located inside the bagging machine, and the resulting force moves the machine and the tractor coupled to it. The operating speed, closely linked with the resulting tension in the grain bag material, is adjusted by means of a braking system built in to the bagging machine which exempts the tractor from towing or braking.

The following chart shows the main functions of the machine and the components used to perform each of them.

Function	Related component or system
Grain intake	*Receiving hopper*
Internal grain movement	*Auger driven by tractor PTO*
Movement of the bagging machine + tractor together	*Automatic movement resulting from grain pressure on the machine’s inclined plane.*
Movement speed adjustment	*Built-in braking system*

5. PREPARATION AND SETUP

5-a. Recommendations to Ease Subsequent Extraction

The ***AKRON®*** model **EXG 300** grain extractors ***AKRON®*** are ideal complements to the **AKRON®** model **E 9400 D** bagging machine, and they require certain conditions in the situation and preparation of the grain bags.

If the initial tie on the grain bag is made using nailed boards or a plastic seal, less cereal will remain after extraction to be removed manually compared with using a rope tie (see paragraph 6-f. “Closing the grain bag”).

Figure 1 shows that, if a grain bag is laid parallel to a wire fence, a minimum of 4-metres space must be kept between them, taking into account that the extractor loads a vehicle moving on its right-hand side from the point of view of the tractor driver.

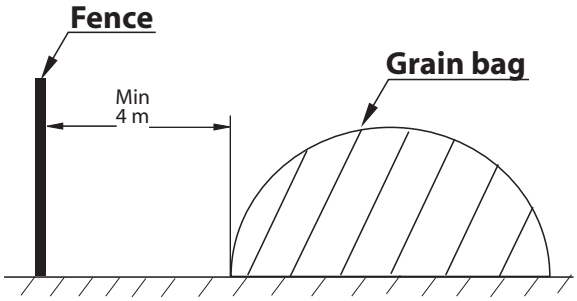

Figure 1- Minimum space between a grain bag and a wire fence

If grain bags have to be laid parallel to each other as shown in Figure 2, at least 1 (one) meter (3.25’) should be left between them in order to work without difficulties during extraction. In any case, as indicated before, the most important precaution is to anticipate that the first grain bag can be easily accessed from the side on which the grain receiving vehicle must move.

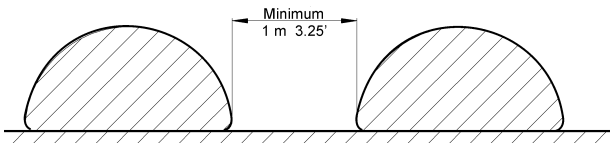

Figure 2 - Space between grain bags

5-b. Prior Checks in the Field

The soil must be firm, completely clean and free from remains of seeds, loose earth, weeds, etc., since otherwise the machine’s braking conditions could be affected or the grain bag integrity could be at risk. This would logically have a negative effect on the correct conditions for the product’s conservation. In the table shown on the next page, some precautions are detailed regarding soil condition and its influence on bagging quality.

Preliminary ground preparation and cleaning are extremely important, since they involve little time and low cost but guarantee the integrity of the grain bag and thus greater reliability of the storage system.

5-c. Prior Checks on the Machine

It is indispensable for the machine to be in a good state of maintenance as per the recommendations given in section 7. “Maintenance”. Nevertheless, the following are some simple checks that should be made prior to starting each grain bag.

- Tire pressure is a very important parameter, since it determines the performance of the machine, which works with permanent braking. The pressure should be between 2.4 and 2.7 bar (36 a 40 lb/pulg^2) for adequate operation.

- It is fundamental to visually check that all accessories, locks, means of fixing, etc. are in place and there are no loose, damaged or lost parts. In any of these cases, the necessary adjustments or corrections should be made before operating the machine.

- All protections and safety covers should be checked to be in their place and free from any signs of wear that could hinder their functioning.

- It is advisable to clean all the machine surfaces as thoroughly as possible to make the work safer, since dirty surfaces become more slippery.

5-d. Machine Parking

While parked and uncoupled from the tractor, the machine is designed to remain stable on firm soil with a maximum slope of 8.5º. Uncouple the driveshaft and proceed as explained below depending on the parking direction.

Precautions regarding ground conditions	Importance and related risks
The selected place should be away from trees and forest walls.	*It is a good measure to reduce the risk of accidental breakage.*
The ground must be free of weeds, stubble, etc.	*Imperfections on the ground could damage the under part of the silo bag during bagging, which would make it more prone to attacks from rodents.*
There should be no loose soil, leftover grain, etc.	*The braking capacity of the machine's wheels would be affected and the silo bag would therefore be filled at a tension lower than adequate.*
There must be no steep level differences (holes).	*If a wheel falls into a hole, the tray could touch the ground, pressing the silo bag against the silo tunnel with the risk of tearing the silo bag.*
The ground must be transversally level.	*If the machine tilts to one side while operating, grain would accumulate on one side of the silo bag and dangerous tensions would arise on the other side.*
The ground must be longitudinally level (in the bagging direction).	*The silo bag will "copy" any ground irregularity or imperfection, which can give rise to air spaces that may locally affect product conservation conditions.*
On sloping ground, the operating direction must be against the slope.	*Bagging must be carried out uphill for the silo bag to be filled in a more controlled and even way.*

WARNING: *When parking pointing down a slope or against it, the brake must always be applied (50 A 80 kg/cm^2), or otherwise the machine will move.*

a- Against the slope (Figure 3): Apply the brakes to immobilize the machine, install the fixed support leg in the position indicated under the parallelogram and tilt the machine slightly backwards so that said support leg touches the ground. In this position, both tires and the support leg support the machine.

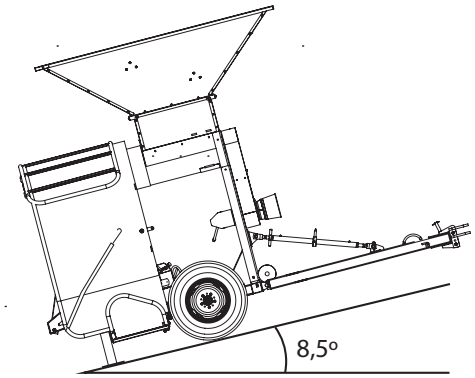

Figure 3 – Bagging machine parked against a slope

b- Pointing down the slope (Figure 4): Apply the brakes to immobilize the machine. Adjust the angle between the towbar and the chassis by means of the adjustment ratchet until the towbar touches the ground. This will force the machine to tilt backwards until the support leg touches the ground. In this position, both tires, the support leg and the towbar support the machine.

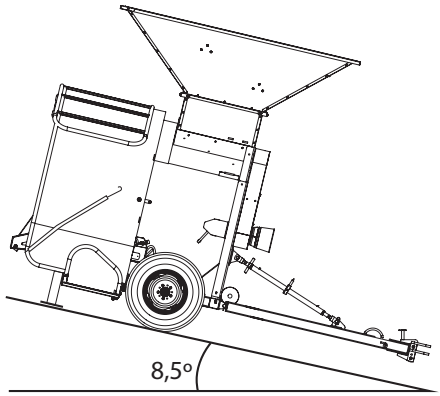

Figure 4 - Bagging machine parked pointing down a slope

c- Against the slope, machine in oblique position: Proceed as indicated in item a.

d- Pointing down the slope, machine in oblique position: Proceed as indicated in item b.

5-e. Machine Positioning

If the bagging machine must be kept in a stable position, the fixed support leg should be installed in its place under the parallelogram as Figure 5 – Support leg rear locationne from the tractor. Part of the machine's weight should be transferred to the support leg so as to force it to touch the ground. To this effect, the angle between the chassis and the towbar should be adjusted by means of the adjustment ratchet. Afterwards, the machine's disc brakes should be applied in order to immobilize it.

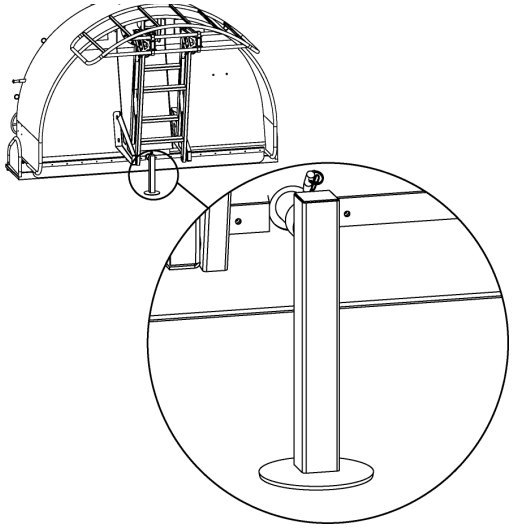

Figura 5 – Support leg rear locationne from the tractor.

The machine must be coupled to the driving tractor by the towbar, as shown in Figure 6. For safety reasons, the PTO should be connected only after the grain bag has been mounted on the machine.

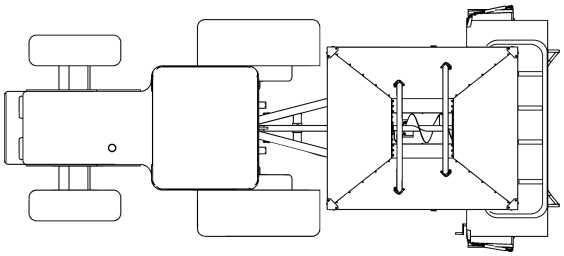

Figure 6 - Bagging machine coupled to the tractor

For mounting the grain bag, the machine must be coupled to the tractor, and the tractor's hand brake should be applied. The machine's brakes should also be applied. The handle operating the hydraulic brake pump can be seen in Figure 7. The pressure applied to the brakes' hydraulic system must be aproximately 90 bar.

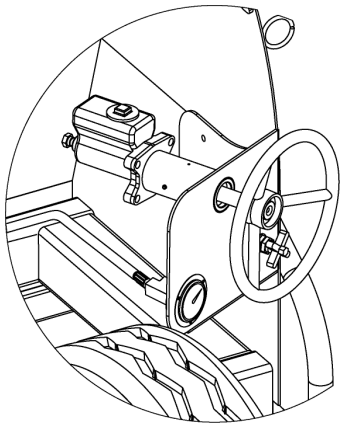

Figure 7 - Hydraulic brake system

5-f Adjusting the brake system.

Follow next steps to properly adjust brake preasure

PROCEDURE

1)Open the safety valve

2) Turn wheel clockwise until desire preasure is reached. Adjust preasure by turning wheel clockwise or counter clockwise as neccessary.

Close the safety valve once the bags manufacturer strech recommendation is obtained.

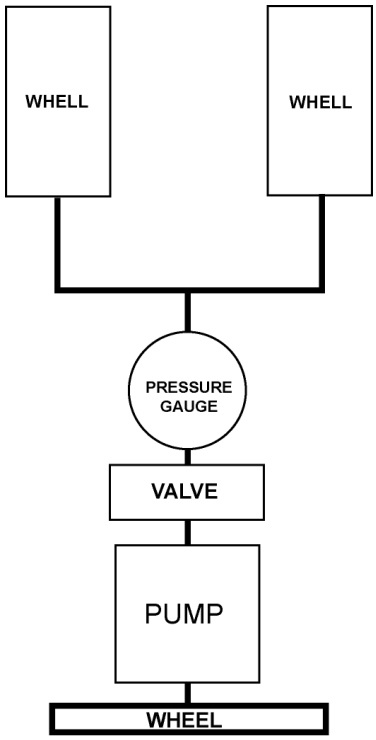

Figura 8 - Functions of the kit valves

5-g. Grain bag Preparation and Mounting

The following are basic instructions for grain bag preparation, but it is essential to observe the particular recommendations of the grain bag manufacturer, since different or additional precautions may be required.
The grain bag must be carefully removed from its package and unfolded on the area where the bagging will be started, which should be clean and level as explained in paragraph 5-b. "Prior Checks in the Field".
Then the grain bag can be mounted on the hanger as explained below.

WARNING: *When the tray is released and lowered, care should be taken not to trap the operator's feet.*

1) Once the lock latch has been released, loosen the side turnbuckles which hold the tray by turning both cranks as shown in Figure 9. The tray should touch the ground.

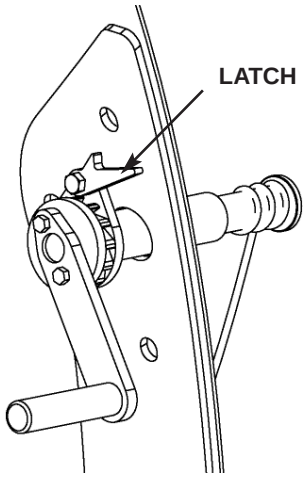

Figure 9 - Crank lock latch

2) Realese the safety latch shown in picture 10. Rotate the winch handle to lower the bag cradle to a height were the bag can be easily placed. (aprox 70 cm/ 27 inches)

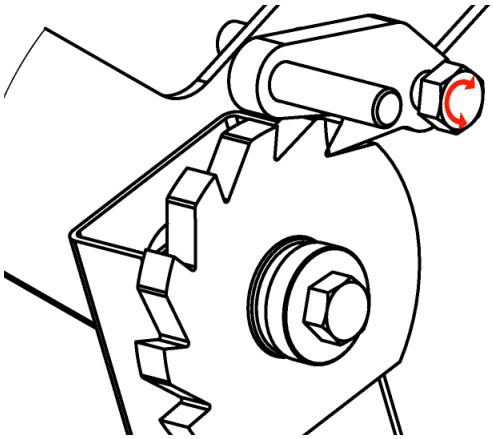

Figura 10 - Hanger lock hook

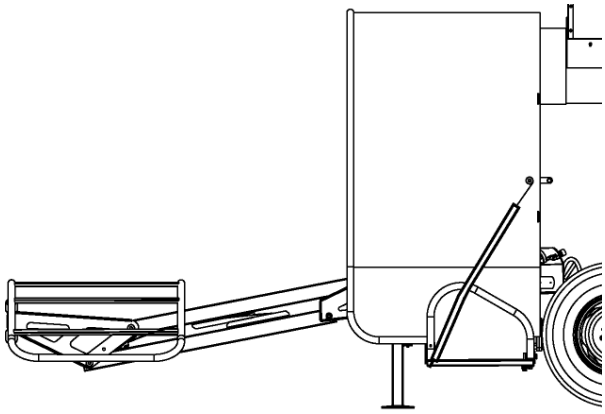

Figura 11 - Bag hanger assembly in horizontal tip-up position

ATTENTION: *Never stay on the bags cradle trajectory while lifting or lowering the cradle, failure to follow this instruction can cause serious injuries to operator.*

3) Use the bags manufacturer middle- of-the-bag mark to center the bag with the cradle. The strech marks stamped on the bag should always be as shown in fig 12 (15 cm/ 6 inches from the end of the cradle).

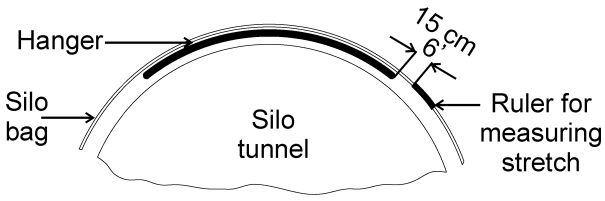

Figure 12 - Positioning of the silo bag on the hanger

4) Operate the winch handle to lift the bag. As the bag contacts the bagger, the operator will need to guide the bag on the sides of the tunnel.

5) Once the cradle comes to a stop, it is in its working position.

WARNING: *While the hanger is being hoisted with the grain bag, all operators should remain at least 2 m (6.5') away from the machine.*

The cradles working position is as shown in fig 13.

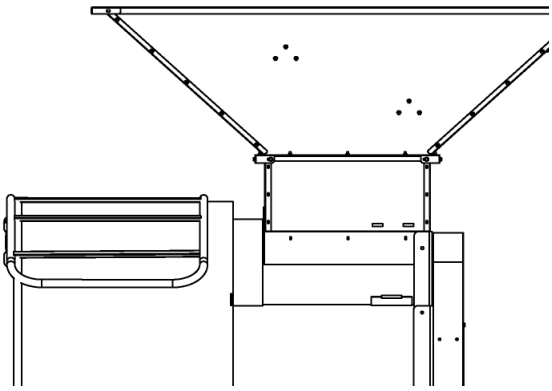

Figura 13 Hanger in its highest position

6) At the same time the grain bag covers the tunnel, its bottom part should be supported by the tray. Care should be taken that the grain bag reaches the end of the tunnel and that all the folds are properly contained in the tray.

7) Using the cranks again, tighten the tray-supporting cable until the tray is at some 10 cm (4”) from the ground, parallel to the lower part of the silo tunnel. When adjusting the tray height, its lower part should coincide with the lower edge of the rubber that prevents grain returning. This way a 15 mm (9/16”) clearance is set between the lower part of the tunnel and the tray, which allows the grain bag folds to be released smoothly and at the same time prevents the grain from returning to the tray, i.e. from falling outside the grain bag. Figure 15 and the additional detail explain this.

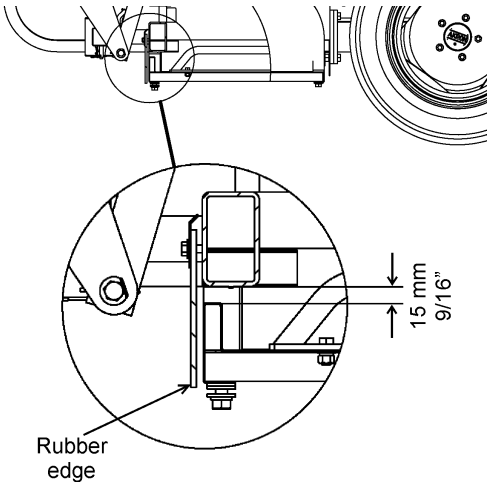

Figure 15 - Grain retainer rubber

8) Unfold some 2 m (6.5') of the grain bag, ensuring that the folds first come out from the tray.

9) Using the adjustment ratchet, level the machine taking as an approximate reference the upper rim of the grain receiving hopper as shown in Figure 16. If it were necessary to change the turnbuckle rotation direction, turn the lock latch 180º. This way, the correct tray-ground clearance is achieved and the tray is horizontal.

WARNING: *Before approaching the grain conveying auger, check to see that the driveshaft is disconnected from the machine, in order to avoid accidental injuries while the auger is being inspected.*

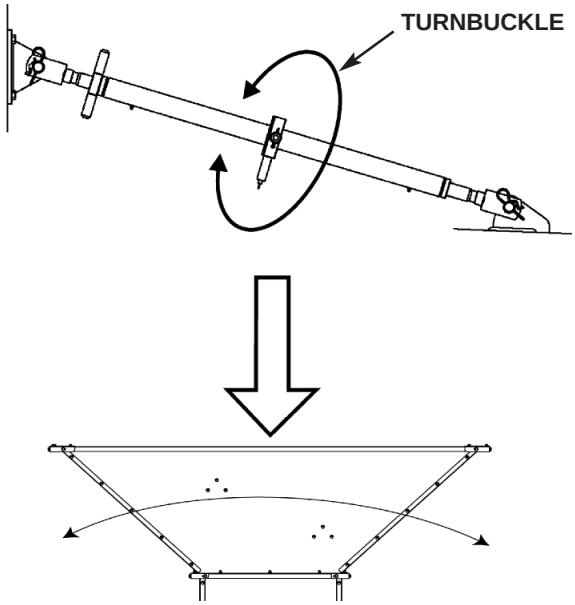

Figure 16 - Bagging machine leveled by means of the turnbuckle

10) Before continuing with the preparation of the grain bag, check that the auger is completely free from obstructions along the entire tube and sleeve, i.e. that it rotates freely. Figure 17 shows the front of the auger.

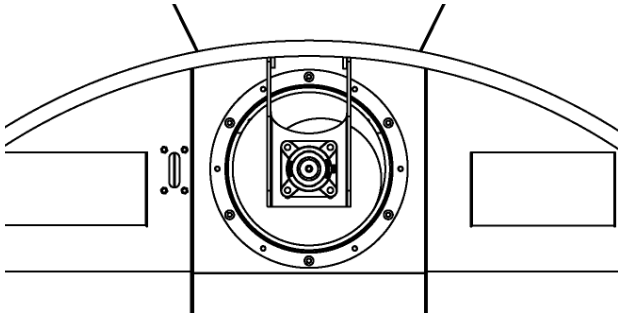

Figure 17 – Auger front

11) Position the elastic rope as an accessory so that it holds the grain bag mounted on the silo

tunnel. This 16-mm (5/8”) diameter rope, which helps to control the unfolding of the grain bag, hooks into the eyelets located at the bottom of the tray as shown in Figure 18 (A). The 8-mm (5/16”) diameter rope used for holding the elastic rope should be hooked into the eyelets located on the silo tunnel, running round the elastic rope between one ring and the next. This retaining rope should end up arranged in a zigzag as shown in Figure 18 (B).

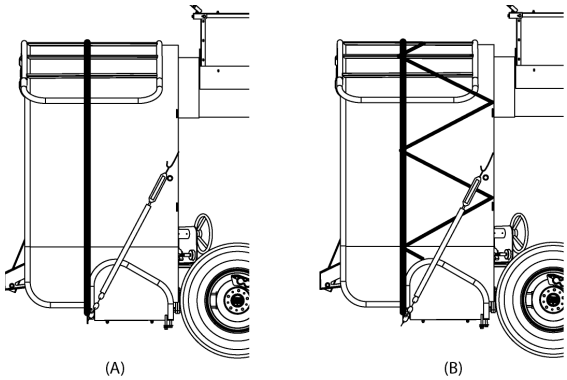

Figure 18 – Arrangement of elastic ropes

12) Close the end of the grain bag. Although the manufacturer of the grain bag usually gives instructions, paragraph 6-f. “Closing the grain bag” offers general instructions on some of the possible closing methods. Both the closing at the front and at the end of the grain bag are very similar, but the front end must always be rolled downwards and held appropriately while the grain bag starts to fill in order to prevent the end from opening. This is necessary mainly due to the air blowing effect caused by the auger and the grain itself.

5-h. Final Adjustments Before Starting the Bagging

As indicated before, the machine driveshaft should be coupled to the tractor PTO only after the grain bag has been closed. Otherwise, the operator would be working on preparing the grain bag while the grain conveying auger is accessible and coupled to the PTO, which would involve a risk of being trapped in the case of its accidental operation from the tractor. Keeping in mind that the towbar is already linked to the tractor, do the following:

1) Release the end of the driveshaft from its support on the bagging machine towbar as shown in Figure 19.

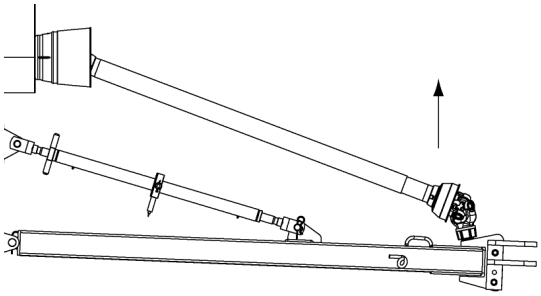

Figure 19 - Released driveshaft

2) Extend the driveshaft and couple the splined end to the tractor PTO outlet shaft.

3) Fit the static plastic covers using the chains and locks provided for this purpose. The driveshaft should not be operated without these plastic protectors being properly fixed in place. All the safety warnings indicated on the driveshaft must also be observed.

WARNING: *Always uncouple the driveshaft if any maintenance tasks must be performed on the machine.*

6. BAGGING PROCEDURE

6-a. Operation Start-up

With the machine and grain bag prepared as explained in the previous section, the bagging operation can be started following these steps:

1) Prepare the vehicle that will supply the grain to be bagged (usually a self-unloading grain cart). This vehicle's discharge tube should be arranged as shown in Figure 19. The grain entering the bagging machine should fall as directly as possible into the centre of the receiving hopper. Otherwise, grain might hit the opposite side of the hopper and spill out.

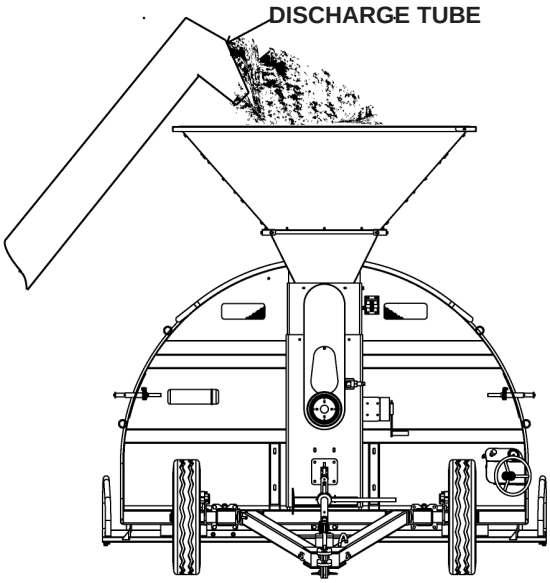

Figure 19 - Discharge tube position

2) Use a straight line as a reference along the route of the grain bag in order to avoid bends in its entire length. Otherwise, there is a risk of the material being overstretched in some areas, which might make it break later. Some possibilities are: use a distant, clearly-identifiable tree as a reference; lay a string tensed along the route; keep a constant distance from a wire fence.

3) Remember that both tires should be inflated to a pressure within the range recommended in paragraph 7. "Maintenance".

4) Check that the initial pressure of the hydraulic brake system is around 98.06 bar (9806.6 kPa).

5) Gradually operate the tractor PTO until it reaches its running speed, 540 RPM.

IMPORTANT: *Always start up the PTO before beginning to introduce grain into the hopper in order to avoid over-loading the auger.*

WARNING: *When grain enters the receiving hopper and the grain bag end starts to become tensed, the bagging machine and the tractor will suddenly start to move. The operators must be ready for this moment.*

6) Start feeding grain gradually, checking that the end of the grain bag is adequately filled and is lying evenly on the ground as shown in Figure 20. Remember that the front end of the grain bag must be turned over.

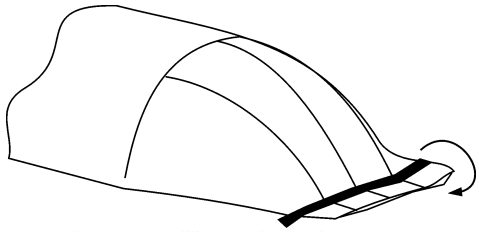

Figure 20 - Filling of the grain bag front end

Stop feeding grain as often as necessary in order to rearrange the end of the grain bag; it will be impossible to correct its position once it is fully loaded.

This initial control is very important so that the tension in the grain bag material is even once storage has been completed. The pressure on the end of the grain bag must not be excessive. Grain must keep its natural slope inside the grain bag end so as not to exert excessive force on the closure.

As the grain enters via the hopper, the auger will convey it to the end of the grain bag until the machine starts moving forward, pushing the tractor. This is a very important moment: the safety of the operators is the priority and care must be taken that, when the machine starts moving, it does not cause any injuries. The movement of the grain feeding vehicle must be coordinated so that grain continues easily entering the receiving hopper of the bagging machine.

6-b. Operation Parameters

1) The machine's braking force is directly related to the resulting tension in the silo bag: the pressure on the brakes should be adjusted so as to make the best use of the silo bag's storage capacity, i.e. to apply the greatest possible tension to the silo bag material according to the manufacturer's provisions. As shown in Figure 21, most silo bags have some kind of ruler or indication printed on their surface that can be matched with a measurement template supplied by the manufacturer in order to determine the degree of tension on the plastic material.

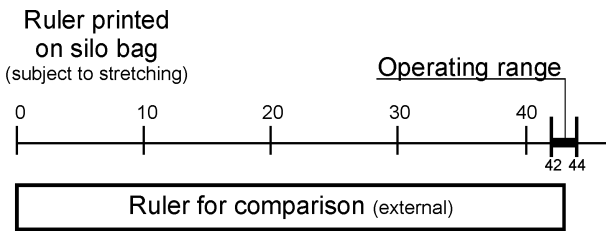

Figure 21 – Ruler printed on the silo bag

It is safer to stay in the centre of the silo bag's stretching range so as to allow for further grain settling.

2) Apart from checking this on the silo bag, it is most important not to exceed 147.09 bar (14 709.9 kPa) in the hydraulic brake system. The manometer has an indication of the operating pressure range.

3) If, despite the precautions explained in 5-b. "Prior Checks in the Field", the bagging machine wheels skid due to wet ground or loose soil, the pressure of the hydraulic brake circuit must be reduced. As a last resort, if this is not enough, the tractor's brake can be used to contribute to braking both machines, but the purpose of the bagging machine wheels is to rotate, not to skid.

4) The silo bag must be seen to be unfolding gradually, one fold at a time. This can be regulated using the turnbuckles that hold the lower support tray. This way, the clearance between the tray and the tunnel's lower rubber is adjusted as shown in item 10, paragraph 5-e. "Silo Bag Preparation and Mounting".

6-c. Protection against Overloads

In the machine's driveshaft intake there are mechanical fuses, consisting of screws that will break if there is any overload in the transmission.

These screws should never be modified under any circumstances, since they guarantee the machine's integrity and its correct operation. In order to reestablish transmission, replace the broken screw using the indications given in the following table:

Walterscheid driveshaft

Size	Grade	Type	Surface protection	Quantity
M8X1.25X60	8.8 DIN -ISO 931-960	Hexagonal head	Zinc- or cadmium-plated	1

Bondioli & Pavesi driveshaft

Size	Grade	Type	Surface protection	Quantity
M10x1.5x50	8.8 DIN -ISO 931-960	Hexagonal head	Zinc- or cadmium-plated	1

If these screws break repeatedly, the causes provoking this should be investigated.

6-d. Interruptions During Bagging

If the bagging operation has to be temporarily interrupted, this procedure will have to be followed:

1) Stop feeding grain into the receiving hopper of the bagging machine. The auger should be left rotating in order to remove all the grain left inside the receiving hopper and the conveying tube.

IMPORTANT: *Remember that the receiving hopper drives the cereal toward the auger. Do not use it for storage purposes.*

2) Wait a few moments until the auger conveys all the remaining grain from the receiving hopper to the silo bag. The tractor and bagging machine will stop moving almost as soon as the hopper and the conveying tunnel are emptied. Operators should be ready for this sudden stopping of the machine and the linked tractor.

3) By this time, the auger will be rotating unloaded. Gradually reduce PTO speed until it stops, when the auger will also stop rotating.

IMPORTANT: *The auger should be completely free of grain when it is stopped, since any grain left there would produce an excessive load on the auger when it is started again.*

4) Apply the tractor's hand brake as well, so as to make sure that any additional surprise movement of the bagging machine and the tractor is prevented.

5) If any maintenance, repair or inspection tasks need to be carried out on the machine, uncouple the driveshaft from the tractor PTO and prop it on the towbar end support as shown in the figure.

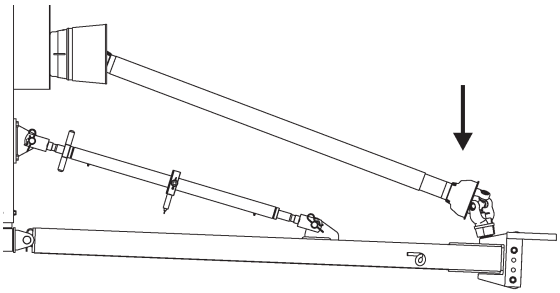

Figure 22 - Driveshaft propped on towbar end

6) If the tractor must temporarily leave the bagging site, release the towbar adjustment ratchet until the tractor hitch pin can be removed.

WARNING: *If the machine is left attached to a semi-prepared silo bag and the driving tractor is removed, care should be taken that the pressure of the hydraulic brake system does not fall. It is best to place wedges on both sides of the machine wheels in order to avoid unexpected movements.*

6-e. Operation at the End of the Grain Bag

Most silo bags have some kind of indication printed on their surface, e.g. a colored stripe, to show that the bottom end is being reached. When this kind of indication appears, or when there are some 4 (four) silo bag folds left on the silo tunnel, do as follows:

1) Follow instructions 1, 2 & 3 from the previous paragraph, 6-d "Interruptions During Bagging".

2) Apply the tractor's hand brake.

WARNING: *If the tractor's hand brake is not in a good condition, when the bagging machine brakes are released grain pressure might push the bagging machine and its linked tractor and the operators would not be able to control it. It is best to stop the tractor engine and leave it in a low gear.*

3) Once the bagging machine is properly held by the tractor, release its own built-in brakes.

4) Gradually release the tractor's hand brake and use a low gear at the same time if necessary. In this way, the pressure exerted by the remaining cereal will push the bagging machine-tractor assembly forward an additional distance.

5) Tow the bagging machine using the tractor until the portion of the silo bag left on the machine's silo tunnel is finally released. The bottom end of the silo bag will then be completely free to be closed.

6-f. Closing the Grain Bag

Both the front end of the silo bag and its bottom end can be closed using different systems (see paragraph 5-f. "Silo Bag Preparation and Mounting"). Instructions for these can usually be obtained from the silo bag manufacturers.

In general terms, the following silo bag closing methods can be explained.

Plastic Closure

This consists of a strip split in two halves, male and female, which trap both sides of a silo bag. This is a high-quality and quick closing method. This operation requires a special hand tool to lock the plastic seal. Proceed as shown below:

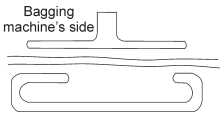

Insert the end of the silo bag into the "U" channel (female half of the plastic closure).

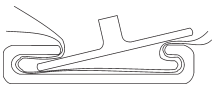

Mould the silo bag material until it fits into the “U” shape and locate the male half of the plastic seal.

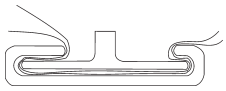

Place the special tool with its roller in the centre of the seal and press on the male half until it is inserted into the female half.

To close the seal completely, the roller must be run from one end of the width of the silo bag to the other.

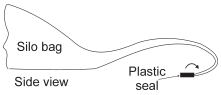

Rotate the plastic closure 2 or 3 times, also winding the silo bag.

Wooden Boards

This is an economical solution, in which the materials to be used must be prepared adequately to prevent a precarious closing from causing an inadequate sealing. Do the following:

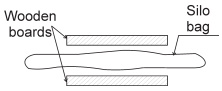

Arrange two wooden boards on the end of the silo bag to be closed.

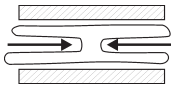

Laterally fold the silo bag, reducing its width so that the boards cover all the material.

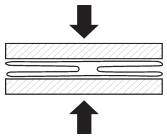

Join both boards checking that the entire silo bag width is pressed between them.

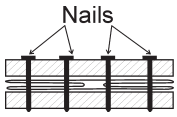

Nail the boards to each other.

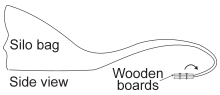

Rotate the board assembly 2 or 3 times, also winding the silo bag.

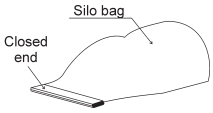

The sealing must have a compact look.

Rope

This is a simple and economical method but it involves a loss of length, since the silo bag must be folded and turned over. The success of this method depends on the operator's skill. Do the following:

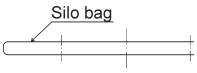

Visually divide the width of the end of the silo bag into 4 (four) parts.

Fold the outside two fourths downwards.

The silo bag end width will thus be reduced.

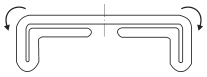

Continue folding the sides of the end downwards.

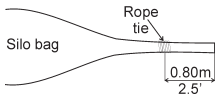

Tie the “roll” thus obtained with a rope located some 0.80 m (2.5’) from the end of the silo bag.

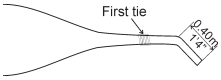

Fold about 0.40 m (1.25’) of this “roll” downwards.

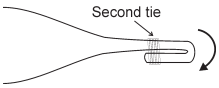

Make a second tie with the rope at the same height as the initial tie.

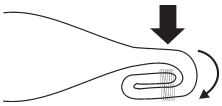

If you are working on the initial end, fold the tie so that it is left under the grain as the silo bag starts to fill.

When you are closing the initial end of the silo bag, it must be held down properly with some weight while it starts filling. This is necessary due to the air blowing effect produced by the auger, even before the grain enters the receiving hopper.

7. MAINTENANCE

The machine is simple, so the only maintenance tasks necessary are the following.

7-a. Maintenance Schedule

The following tables show the maintenance tasks that have to be carried out periodically.

All the tasks indicated as “daily” should be carried out before starting every workday, and the ones indicated as “weekly” should also be carried out when there is any significant change in the conditions of work (change of silo bag, change of grain).

It is very important to keep a written record of all the maintenance tasks performed on the machine.

Daily Tasks

Condition to check	Normal situation	Correction method
General machine condition	*Free movements in general, reasonable cleanliness of main components*	*Eliminate causes of possible restrictions on the movements; remove any dirt that could hinder the machine’s operation.*
Condition of the conveying auger tube	*Free from obstructions or excessive dirt*	*Eliminate possible obstructions or dirt left inside the tube.*

Weekly Tasks

Condition to check	Normal situation	Correction method
Tire pressure	*Between 2,4 and 2,7 bar (36 and 40 lb/pulg^2), both tires at the same pressure*	*Adjust tire pressure*

Half-yearly Tasks

Condition to check	Normal situation	Correction method
Tightening torque for the clamps holding the lifting cable to the parallelogram assembly.	*Clamp nuts tightened*	*Tighten the nuts, torque 2 kgm (20 Nm)*
Condition of the hoist steel cable	*Not more than 3 wires cut on a single strand.* *Not more than 6 wires cut on all the strands along an entire pitch.*	*Replace the cable as indicated in paragraph 7-d, under the title “Hoist Cable Replacement”.*
Operation of auger support bearings	*Silent rolling, free from bumps or abnormal vibrations*	*Grease the bearings using the grease fittings supplied for this purpose. Use NLGI grade 2 lithium grease. If the problem is not solved, dismantle and evaluate possible replacement according to the instructions given in paragraph 7-d., under the title "Auger Support Bearing Replacement”.*

7-b. Maintenance after Receiving the Machine

After some 50 hours of continuous operation, it is essential to re-tighten all the machine's screws using the following torque values recommended for SAE grade 5 zinc-plated screws:

Size	Torque [kgm - N.m (ft.lb)]
1/ 4" - 20	0,96 - 9,5 (7,03)
5/16" - 18	2,03 - 20 (14,81)
3/ 8" - 16	3,61 - 35,5 (26,29)
7/16" - 14	5,81 - 57 (42,22)
1/ 2" - 13	8,86 - 87 (64,44)
9/16" - 12	12,74 - 125 (92,59)
5/ 8" - 11	17,58 - 172 (127,77)
3/ 4" - 10	31,29 - 307 (227,40)

7-c. Lubrication

NLGI grade 2 lithium (multiple-purpose automotive) grease is recommended for all the lubrication points.

7-d. Replacement of Parts Subject to Wear

Hoist Cable Replacement

1) Operate the winch until the cradle reaches the ground. (cable should have no tension)

2) Remove the cable holders on each end of the cable.

3) Remove the old cable and place the new one. This new cable should have the same characteristics as the one used by the manufacturer.

4) Lift and lower the cradle system several times to check for proper cable installation

Auger Support Bearing Replacement

1) Identify the UC 209 bearing and release the Allen studs that fix it to the rear shaft end.

2) Remove the hex head screws (3/4") from the support to remove it. Care must be taken to prevent the auger from falling suddenly on the support.

3) Insert the UC 209 bearing on the rear shaft end. Then, position the support and tighten the hex head screws (3/4") on the rear support.

4) Tighten the Allen studs that fix the bearing.

7-e. Brake Fluid

Periodically check the brake fluid leve. Reservoir level should always be half way full (never overfill). Only use Type 3 brake fluid.

7-f. Prevention of Wearing on Flexible Pipes

Take into account the following items for a better use and care of the flexible pipes included in the machine.

• Visually inspect each one of the brake hydraulic circuit components and hoses. They should not have leakages: Keep them from touching sharp objects. Do not tread on hoses and keep them from being strangled.

• Be careful when working with brake liquid, since it can cause burns on your skin and wearing on metal parts.

• Check that the helical tape covering the hydraulic circuit is in good condition, since it is meant to prevent fluid from hitting the operator if a pipe brakes.

7-g. Tire Change

Complete the following steps:

1) Slightly loosen the wheel nuts.

2) Lift the machine using a mechanical or hydraulic jack applied to the chassis in the location indicated by the decal, as shown in Figure 23.

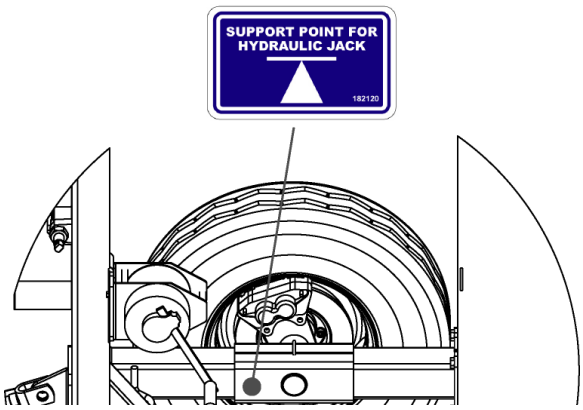

Figure 23 - Support point for jack location

3) Once the bagging machine has been lifted, install the assembled wheel and the five wheel nuts (Parts List # 8).

4) Tighten the wheel nuts using a 21-mm hexagonal wrench up to a final tightening torque of 9 kgm = 90 Nm = 65 ft lbs. pie.

IMPORTANT: *Remember to re-tighten wheel nuts during the first 3 weeks for them fit better on the wheel rims.*

8. MACHINE TRANSPORTATION AND STORAGE

8-a. Preparation of the Machine for Transportation

Once the silo bag has been released from the bagging machine, prepare the machine for transportation in the following way:

1) Uncouple the driveshaft from the tractor PTO and prop it on the towbar support.

2) If this still has not been done, fold the hanger upwards and lock it to the tunnel structure using its lock hook.

3) Use the cranks to tighten the cable and make sure the tray is raised to the maximum possible height.

4) Check both brakes are completely released, i.e. there must be no pressure in the hydraulic system.

5) If necessary, regulate the machine's level by means of the towbar adjustment ratchet.

6) Once the machine has been coupled to the tractor, check that the support leg is located on the column, in the place indicated by decal 026315.

8-b. Transportation

The bagging machine requires no special configuration changes apart from the ones explained in paragraph 8-a. "Preparation of the Machine for Transportation". Figure 24 shows the machine ready for transport and also indicates the towbar hitch. The maximum force that should be exerted on the tractor hitch pin is 650 N.

IMPORTANT: *The **E 9400 D** bagging machine is not designed for road travel. Therefore, **MICRON FRESAR S.R.L.** accepts no liability for accidents or damage that may be caused during transport if the machine is made to travel on roads.*

If the user still needs to do this, we recommend consulting national, provincial and municipal safety regulations in force in each region.

If the machine is transported on a truck, for instance, the 4 fixing points supplied on the bagging machine should be used: 2 hooks on the towbar (front) and 2 eyelets on the chassis. They can all accept tying slings for fixation to the transport means. Figure 25 shows the fixing points which are identified on the machine by means of decals.

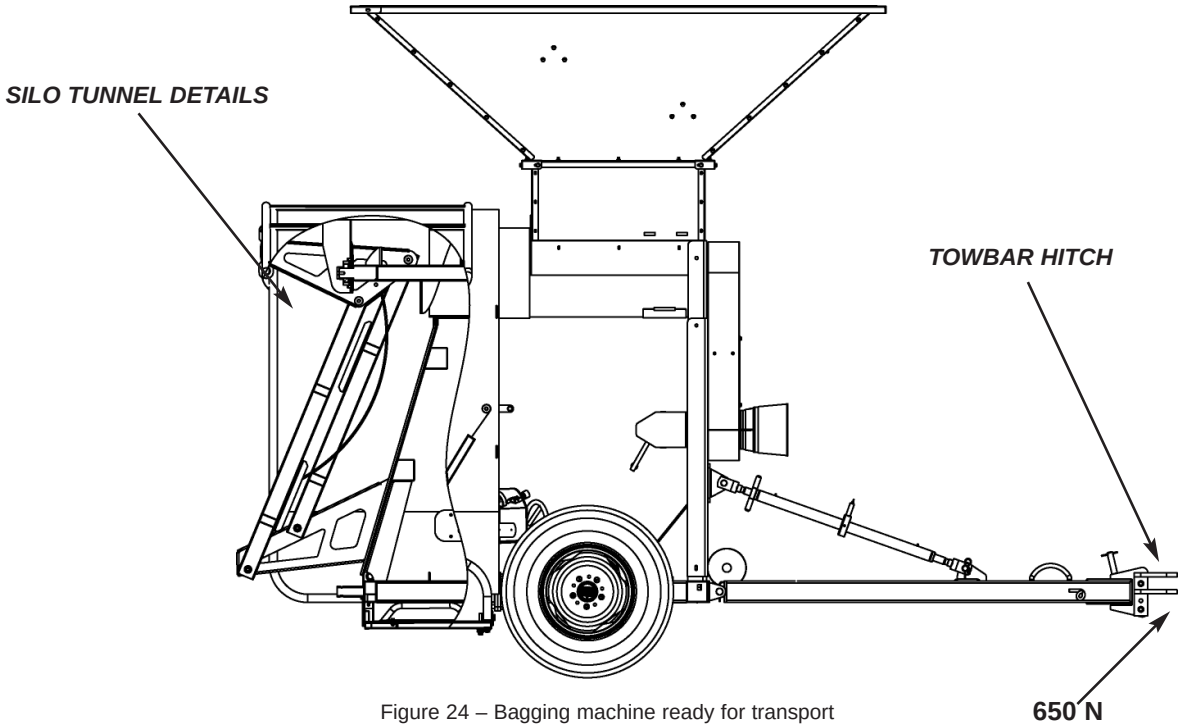

Figure 24 – Bagging machine ready for transport

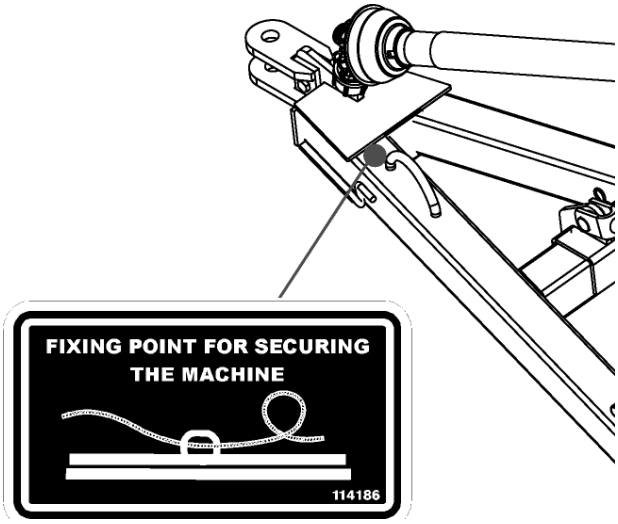

Figure 25 – Identification of fixing points

8-c. Machine Storage

Before storing the bagging machine, ensure that the brake hydraulic system is left without pressure. If the machine is expected to be stored for several days, it is important to adequately grease all the moving parts.

The machine must be stored indoors in a clean and dry place, preferably with a cover to protect it from dirt. If the bagging machine is to stay outdoors temporarily, the lower auger cover should be left open.

9. SPECIFICATIONS

9-a. List of Main Components

Tare:1300 kg (2860 lb)

Tunnel:
For grain bags up to 9 feet.

Operating capacity:
Metric tonnes / hour.

Operation:
Tractor with 60. HP available in the PTO, with a rotation speed rating of 540 RPM.

Tube / auger:
Ø 410 mm (15-3/4”), thickness 8 mm (5/16”), with removable sleeve.

Braking system:
Hydraulic, with built-in manual pump.

Towbar height adjustment:
Enough to absorb differences in the hitch.

Transport position:
No wheel configuration changes are required

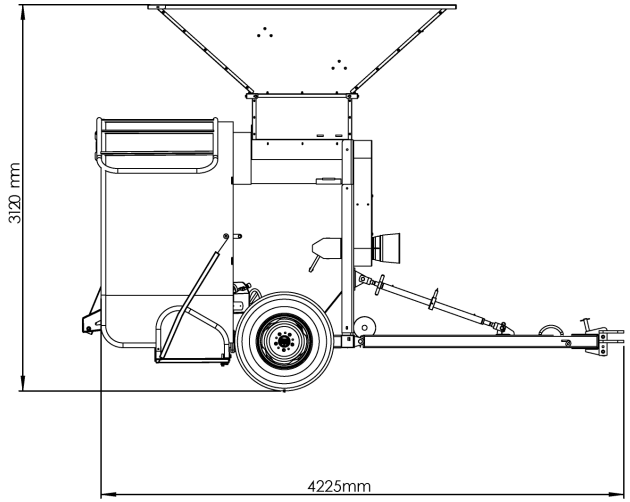

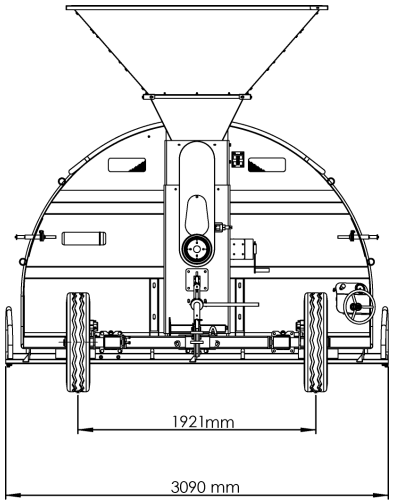

Description	Summary of functions	Assembly #
Receiving hopper	*Receives the grain from a transport vehicle, for instance a self-unloading grain cart. It should not be used for grain storage purposes once the bagging operation has been finished.*	5
Transmission	*Takes the power from the driveshaft inlet to the conveying auger by means of a chain tensioner.*	6
Transmission cover	*This is a protective cover that should be installed at all times for operator safety.*	7
Driveshaft	*Takes the tractor PTO power in order to operate the auger conveying the grain into the silo bag.*	4
Towbar	*This is the link between the machine and the towing tractor. It works in a pushing, not pulling, situation.*	4
Turnbuckle	*It allows the machine height (inclination) to be adjusted for different operating conditions.*	4
Hydraulic brake	*It is operated by a hydraulic pump and acts directly on both machine wheels.*	9
Hoist	*It is a manual means to operate the bagging machine parallelogram.*	3
Parallelogram	*Together with the hanger, they provide a means to lift the silo bag up to the tunnel.*	3
Tunnel	*From the beginning to the end of the operation, it supports the silo bag as it unfolds.*	1
Conveying auger end support	*It links the auger end to the machine's structure*	2
Tube	*It holds the conveying auger and guides the moving grain.*	2
Conveying auger	*Takes the grain into the silo bag.*	2
Silo bag support tray turnbuckle	*It allows the silo bag to be held far enough from the ground.*	1
Silo bag support tray	*Together with the tunnel, it holds the silo bag.*	1
Support leg	*It is the third support point in the static position of the bagging machine.*	1
Elastic ropes	*They allow the silo bag unfolding to be under control.*	1

10. PRODUCT DISMANTLING AND DISPOSAL

The following is meant to inform the user about the steps to follow when the lifespan of the machine, of its fluids or components comes to an end. Dismantling and disposal instructions are included.

• Metal parts or assemblies replaced or modified for particular reasons such as corrosion or wear should be properly disposed of. They should be sent to scrap storehouses or foundries where they can receive an adequate treatment. It is essential to wear personal protective equipment (safety gloves) when handling sheet steel.

• The system fluids which are periodically replaced (non-biodegradable hydrocarbon-derived oils and greases) should not be disposed of in the soil or in water courses, since this would result in environmental pollution. Up to now, the most usual application for these wastes is to use them as fuel for vapor generators (boilers) burning fuel-oil. They may also be burnt is special waste-burning kilns. Otherwise, they should be delivered to companies authorized to handle and transport them.

• Some practical use may be found for tires when they are removed from the machine after becoming worn out. Otherwise, they should be taken to a tire-recycling centre for their medium- or long-term integration into the ecological cycle according to national, provincial and municipal regulations in force.

11. GUARANTEE TERMS

Micrón Fresar S.R.L guarantees the ***AKRON*® E 9400 D** grain bagging machine for a one-year period since the date in which the new unit is delivered to the customer. This guarantee covers defects in materials used to manufacture the machine, provided that the grain bag unloader has been properly operated. The operating procedures considered appropriate are those described in this manual.

This guarantee does not cover the following:

Damages or failures as a result of improper operation or lack of machine maintenance that may occur during transport, operation, or parking from the delivery date.

Tires own guarantee.

Normal wear of parts due to their use. Their replacement is part of the preventive maintenance **(Page 59)**.

Micrón Fresar S.R.L is not responsible for any repair made by third parties, or damages resulting from this cause.

Micrón Fresar S.R.L. reserves the right to modify specifications and designs without previous notice and without the obligation to implement these changes in the machines already delivered.

Damages caused during machine operation by any person whose abilities are affected or reduced will not be covered.

If the machine is sold by the first owner within the guarantee term validity, this will be transferred to the new owner, provided that **Micrón Fresar S.R.L** is advised by written notice. Such guarantee will not be valid if the current owner of the machine (not being the original buyer of the product) has not advised **Micrón Fresar S.R.L** in due time.

The guarantee will automatically become invalid if any of the parts of the machine is modified or replaced by spare parts not provided by **Micrón Fresar S.R.L**. If such replacement or structural modification was urgently necessary, the user must obtain written approval from **Micrón Fresar S. R. L**. to make such changes without affecting these guarantee terms.

In order for the guarantee to come into force, it is an essential condition to submit a request for guarantee repair together with the following information:

Name:

Date in which the damage occurred:

City:

Phone Number:

Machine Model:

Serial Number:

Invoice Number:

12. ALPHABETICAL INDEX

Accessories 7
Storage 11, 12, 13 ,26, 27, 28
Parking 5, 14
Tray 14 ,20, 26, 27, 30
Driveshaft 7, 11, 20, 21, 27, 29
Change 23, 26, 27, 29
Chassis 11, 39
Closing 5, 13, 21, 22
Hydraulic Circuit 15, 20, 21, 28, 55
Contact 5, 7, 11
Ratchet (o hoist) 29, 41, 45
Transmission cover 29, 51
Disposal 6, 31
Dismantling 6,31
Quarterings 37
Bagging 5, 7, 12, 3, 14, 20, 21
Hitch 21, 26, 27, 29
Slings 11, 35
Grain Extractor 5, 13
Operation 12
Guarantee terms 6, 33
Identification 5, 11
Alphabeltical Index 35
Towbar 15, 21, 26, 27, 29, 45
Cleaning 13, 23
Brake fluid 5, 24
Lubrication 5, 23, 24
Maintenence 5, 8, 11, 12, 13, 21, 23
Micrón Fresar S.R.L. 7, 11, 26, 27
Mounting 5, 15, 20, 21
Motor 8, 21
Notes 57,58
Objective 3
Operator 7
Parameters 5, 20,
Bag Hanger 24, 26, 27, 30
Pictograms (decals) 7
Support Leg 14, 15, 30, 35
Platform 39
Preparation 13
Tire pressure 11, 13, 23
Receiving 5, 11, 12, 20, 21, 24, 29, 47
Replacement 5, 23, 24
Technical support 37
Spare parts 6, 11, 23, 24, 35
Wheels 53
Risk 7, 8, 14
Bearins 23, 24
Safety 3, 5, 7, 8, 11, 13, 15, 26, 27, 29, 35
Grain Bag 3, 5, 11, 13, 20, 21, 29
Rope 13, 22
Boards 22
Tasks 23
Tension 12, 14, 20
Turnbuckle 21,26, 27, 29, 30
Ground 5, 13, 14, 20
Lower Hopper 35, 41
Power take-off 12
Torque 24
Tractor 7, 11, 12, 15, 20, 21, 26, 27, 29
Transmission 11, 20,29, 49, 51
Transport 8, 11, 12, 20, 21, 23, 24, 26, 27, 29, 30
Tube / auger 29, 35
Tunnel 21, 24, 26, 27, 29, 30, 39
Speed 8, 12, 21, 29
Checks 5, 11, 13, 20

13. SPARE PARTS LIST

All the components of the ***AKRON*** **E 9400 D** bagging machine are detailed in the following pages. To order a spare part for your machine, do the following:

• Use the attached exploded diagrams, to identify the component/s to be replaced.

• Note the code of each part and, if possible, the name of each assembly.

• Order the spare parts from your nearest ***AKRON®*** Technical Representative or to ***AKRON®*** Spare Parts Service (see 13-a. “Information to Obtain Spare Parts”), indicating each part's code and, if possible, the name of each assembly.

• If replacing a part that originally included safety decals, check that these are also present on the replacement part.

13-a. Information for Obtaining Spare Parts

AKRON® Spare Parts Service
Micrón Fresar S.R.L.
Rosario de Santa Fe 2256
X2400EFN - San Francisco (Córdoba)
ARGENTINA
Tel.: ++54 3564 435900 (rollover lines)
Toll free 0 800 333 8300 (in Argentina)
E-mail: export@akron.com.ar
www.akron.com.ar

The nearest ***AKRON®*** Technical Representative can also be contacted to obtain machine components.

ASSEMBLY # 1 / CHASSIS, TUNNEL / WHEEL CHASSIS / PLATFORM

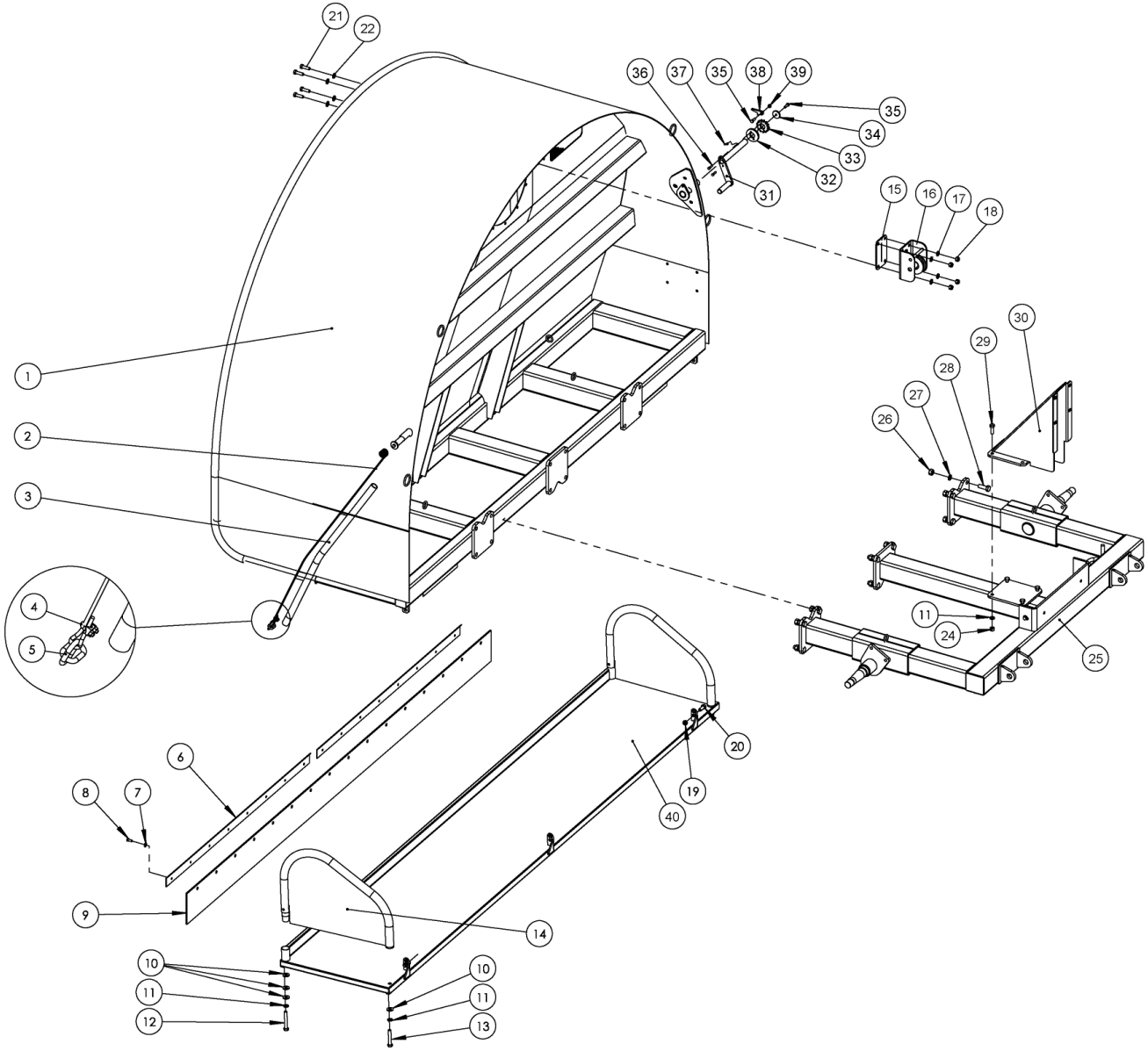

ASSEMBLY # 1 / CHASSIS, TUNNEL / WHEEL CHASSIS / PLATFORM

#	PART #	DESCRIPTION	QTY.
1	29.39.29200	CHASSIS AND TUNNEL	1
2	99.384.02504	Ø 4 mm (Ø 9/64”) STEEL CABLE	1,40 mts
3	99.670.031025	PLASTIC HOSE	2
4	98.384.025451	CABLE CLAMP	2
5	99.389.202080	TRAY TENSIONING CHAIN	2
6	29.52.25260	RUBBER BAND SUPPORT	2
7	98.309.100079	5/16” FLAT WASHER	16
8	98.002.079019	G5 5/16" x 3/4" W HEX HEAD SCREW	16
9	29.46.25117	RETAINER RUBBER F/GRAIN	1
10	98.309.100127	1/2” FLAT WASHER	8
11	98.310.100127	1/2” SPLIT LOCK WASHER	8
12	98.002.127089	G5 1/2" x 3-1/2" W HEX HEAD SCREW	2
13	98.002.127076	G5 1/2" x 3" W HEX HEAD SCREW	2
14	29.39.26108	SIDE RETAINER	2
15	29.46.27209	WINCH CABLE RUBBER	4
16	29.39.27280	PULLY SUPPORT	1
17	98.309.100095	3/8” FLAT WASHER	4
18	98.304.110095	3/8" RW x 16 H SELF-LOCKING NUT	4
19	98.304.110127	1/2" W SELF-LOCKING NUT	3
20	98.002.127032	G5 1/2" x 1¼" W HEX HEAD SCREW	3
21	98.311.100095	3/8" WASHER	4
22	98.002.095031	G5 3/8"x1 1/4" W HEX HEAD SCREW	4
23	29.39.25572	ELASTIC ROPES W/HOOKS (NOT INDICATED).	1
24	98.301.150127	G5 1/2" W HEX NUT	4
25	29.39.26130	WHEEL CHASSIS	1
26	98.301.150158	G5 5/8" W HEX NUT	12
27	98.310.100158	5/8” SPLIT LOCK WASHER	12
28	98.002.158044	G5 5/8" x 1-3/4" W HEX HEAD SCREW	12
29	98.002.127038	G5 1/2" x 1½" W HEX HEAD SCREW	8
30	29.39.26135	ANGLE BRACKET & BASE	1
31	29.39.26220	CRANK	2
32	29.52.26222	PROTECTIVE WASHER	2

#	PART #	DESCRIPTION	QTY.
33	29.42.26223	STAR LOCK	2
34	29.43.26228	REEL	2
35	98.002.079025	G5 5/16" x 1" W HEX HEAD SCREW	4
36	98.002.063025	G5 1/4" x 1" W HEX HEAD SCREW	4
37	98.077.079013	5/16" X 1/2" W ALLEN SCREW W/O HEAD.	2
38	29.52.26227	LOCK LATCH	2
39	98.304.151079	G5 5/16" W SELF-LOCKING NUT	2
40	29.39.26107	TRAY	1

ASSEMBLY # 2 | AUGER / LOWER HOPPER

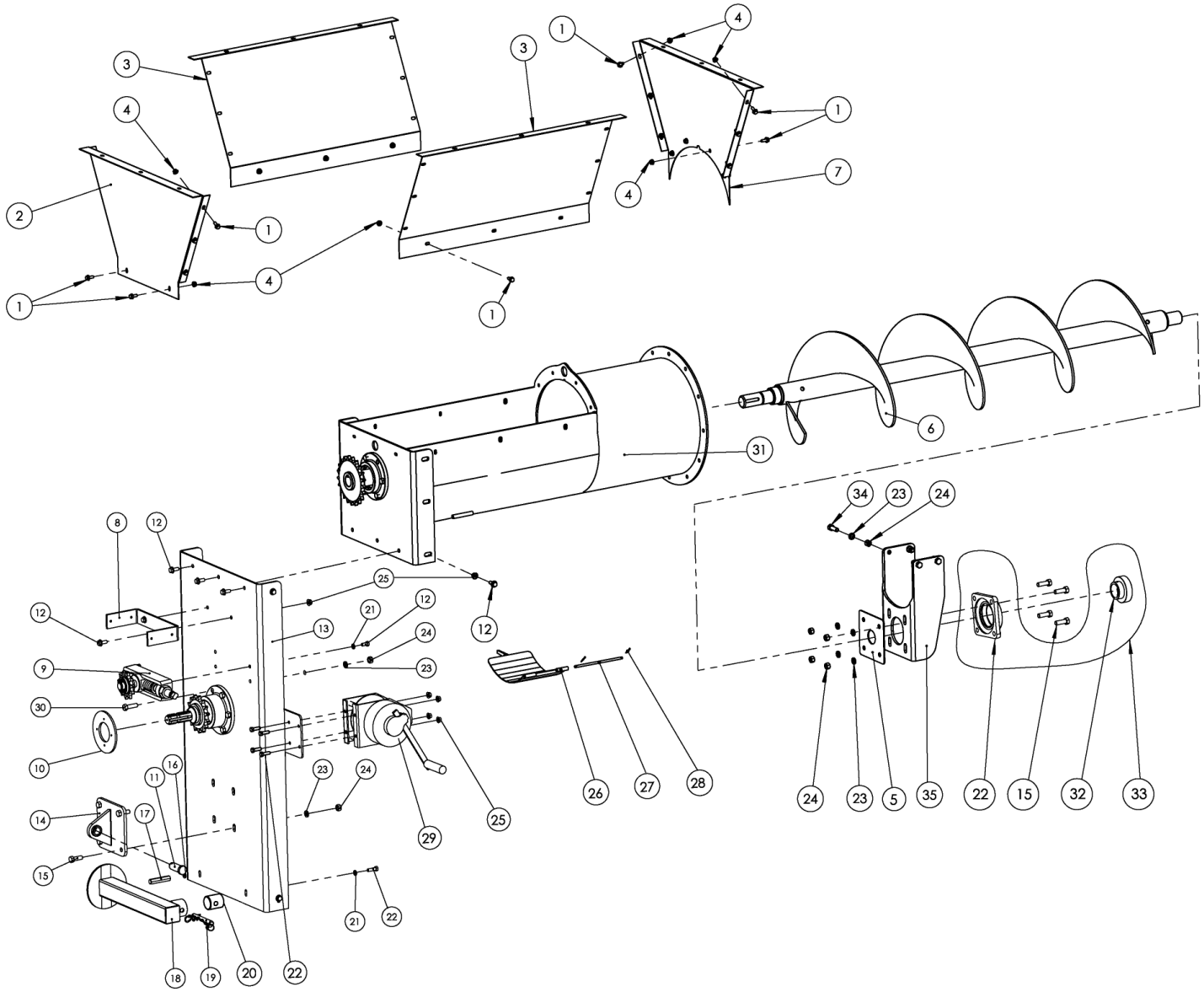

ASSEMBLY # 2 | AUGER / LOWER HOPPER

#	PART #	DESCRIPTION	QTY .
1	98.006.079019	G5 5/16" x 3/4" W FLANGE SCREW	70
2	29.52.26323	LOWER HOPPER FRONT SHEET	1
3	29.52.26322	STEEL SIDE SHEET	2
4	98.305.150079	G5 5/16" W FLANGE NUT	70
5	29.42.26243	PROTECTION PLATE	1
6	29.39.25951	AUGER	1
7	29.52.26321	LOWER HOPPER REAR SHEET	1
8	29.43.26332	CHAIN COVER SUPPORT	1
9	29.39.26380	CHAIN TENSIONER	1
10	25.42.14847	PTO INLET PROTECTION FLANGE	1
11	29.43.25208	TURNBUCKLE ANCHORING PIN	1
12	98.006.095025	G5 3/8" x 1" W FLANGE SCREW	12
13	29.39.29352	COLUMN	1
14	29.39.26340	ADJUSTMENT RATCHET SUPPORT	1
15	98.002.127038	G5 1/2" x 1-1/2" W HEX HEAD SCREW	8
16	98.309.101095	3/8” FLAT WASHER	16
17	29.43.26314	HEXAGONAL LOCK F/SUPPORT LEG	1
18	29.39.26140	SUPPORT LEG	1
19	25.39.14280	LONG PIN WITH CHAIN	1
20	29.43.26313	COLUMN SUPPORT FOR JACK	1
21	98.460.300063	1/4" NF STRAIGHT GREASE FITTING	1
22	06.41.00145	AM-45 SUPPORT	1
23	98.310.100127	1/2” SPLIT LOCK WASHER	8
24	98.305.151127	G5 1/2" HEX NUT	8
25	98.305.150095	G5 3/8" W FLANGE NUT	4
26	29.39.25999	AUGER LOWER COVER	1
27	29.43.25973	AUGER COVER HINGE PIN	1
28	98.334.030031	Ø3x30mm SPLIT PIN (Ø 1/8” x 1-3/16”)(NOT INDICATED)	2
29	98.395.026349	HOIST	1
30	98.002.127044	G5 1/2" x 1-3/4" W HEX HEAD SCREW	6
31	29.39.29395	AUGER TUBE	1
32	98.755.3555545	UC 209 BEARING	1

#	PART #	DESCRIPTION	QTY
33	29.39.26343	SUPPORT W/UC 209 BEARING	1
34	98.002.127032	G5 1/2" x 1-1/2" W HEX HEAD SCREW	14
35	29.42.25971	AUGER SHAFT SUPPORT	1

ASSEMBLY # 3 I PARALLELOGRAM / HOIST

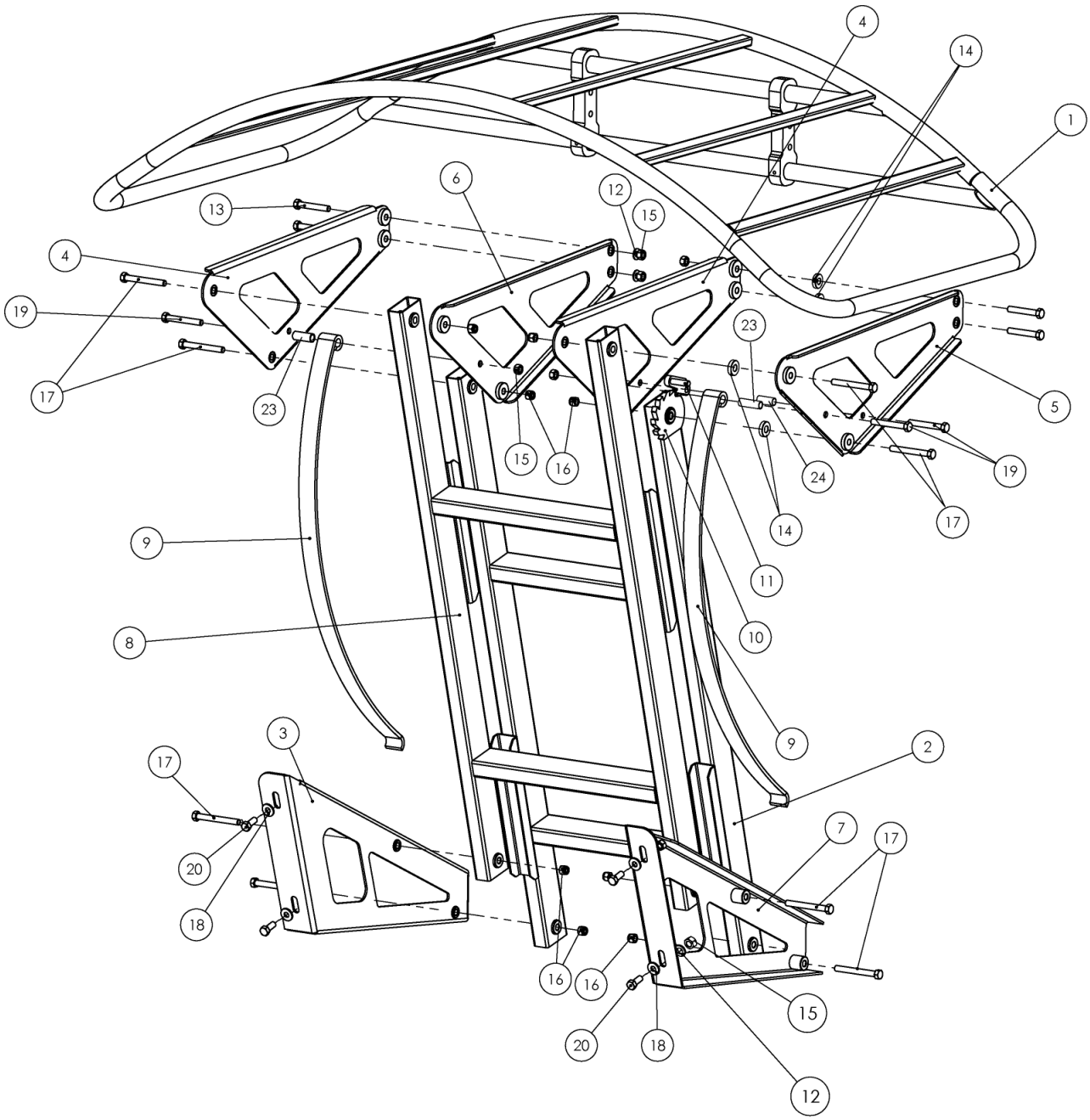

ASSEMBLY # 3 / PARALLELOGRAM / HOIST

#	PART #	DESCRIPTION	QTY.
1	29.39.29536	CRADLE ASSEMBLY	1
2	29.39.29550	PARALLEL LINK ARM	1
3	29.39.29555	LEFT SUPPORT	1
4	29.39.29560	CRADLE SUPPORT	2
5	29.39.29565	LEFT CRADLE SUPPORT	1
6	29.39.29575	RIGHT CRADLE SUPPORT	1
7	29.39.29570	RIGHT SUPPORT	1
8	29.39.29580	RIGHT SUPPORT	1
9	98.342.027568	LEAF SPRING	2
10	29.42.27569	CRADLE LOCK	1
11	29.39.29590	LOCK SHAFT	1
12	98.310.100127	1/2” SPLIT LOCK WASHER	8
13	98.002.127089	1/2” X 3 1/2” G5W HEX HEAD SCREW	4
14	29.43.27577	CRADLE BUSHING	4
15	98.301.150127	1/2” G5W NUT	8
16	98.304.151127	1/2” G5 W SELF-LOCKING NUT	2
17	98.002.127114	1/2” X 4 1/2” G5 W HEX HEAD SCREW	8
18	98.309.101127	1/2” FLAT WASHER	8
19	98.002.127102	1/2” X 4” G5 W HEX HEAD SCREW	4
20	98.002.127038	1/2” X 1 1/2” G5 W TORN. HEX	4
21	98.384.026470	Ø1/2” CABLE CLAMP (not indicated)	2
22	98.384.026459	Ø8mm CABLE THIMBLE (not indicated)	4
23	29.43.29584	ELASTIC SHEET BUSHING	2
24	29.43.27571	LATCH SPACING BUSHING	1

ASSEMBLY # 4 I TOWBAR / TURNBUCKLE

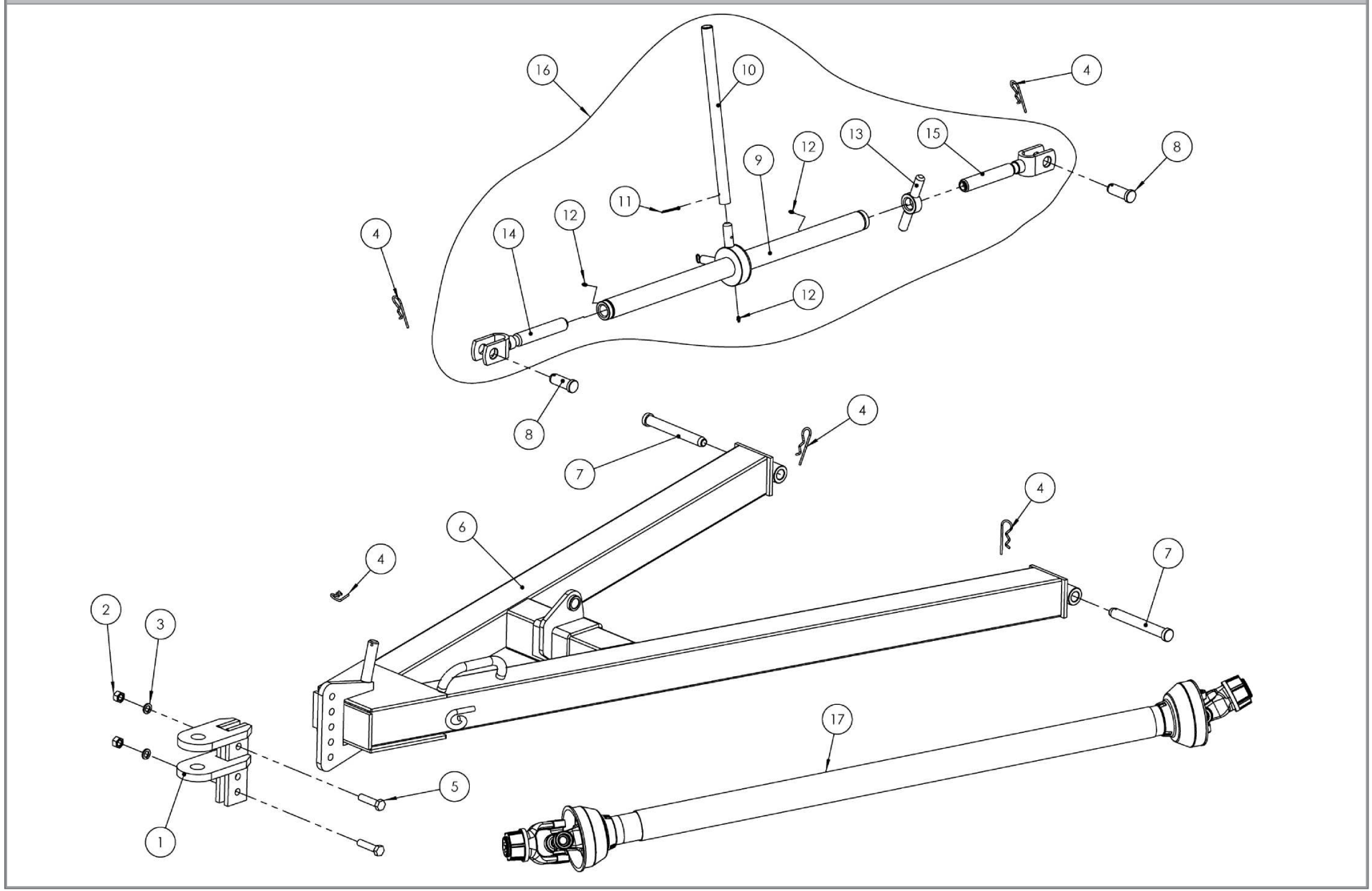

ASSEMBLY # 4 / TOWBAR / TURNBUCKLE

#	PART #	DESCRIPTION	QTY.
1	29.39.26160	TOW HITCH	1
2	98.301.150158	G5 5/8" W HEX NUT	2
3	98.310.100158	5/8” SPLIT LOCK WASHER	2
4	98.380.040090	90mm-LONG Ø4 COT.PIN (Ø5/32”x3-½")	5
5	98.002.158063	G5 5/8" x 2-1/2" HEX HEAD SCREW	2
6	29.39.25160	TOWBAR	1
7	29.43.25158	TOWBAR PIN	2
8	29.43.25208	ADJUSTMENT RATCH.ANCHORING PIN	2
9	29.39.25664	ADJUSTMENT RATCHET BODY & LOCK	1
10	29.43.25670	TURNBUCKLE OPERATING LEVER	1
11	98.334.040050	Ø 4 x 50 mm SPLIT PIN (Ø 5/32” x 2”)	2
12	98.460.100131	1/4" BSP STRAIGHT GREASE FITTING	3
13	29.39.25665	JAM NUT WITH HANDLES	1
14	29.39.25658	FORK WITH RIGHT THREAD SCREW	1
15	29.39.25662	FORK WITH LEFT THREAD SCREW	1
16	27.29.80700	TURNBUCKLE	1
17	98.395.018775	DRIVESHAFT F/80 HP	1

ASSEMBLY # 5 / UPPER HOPPER

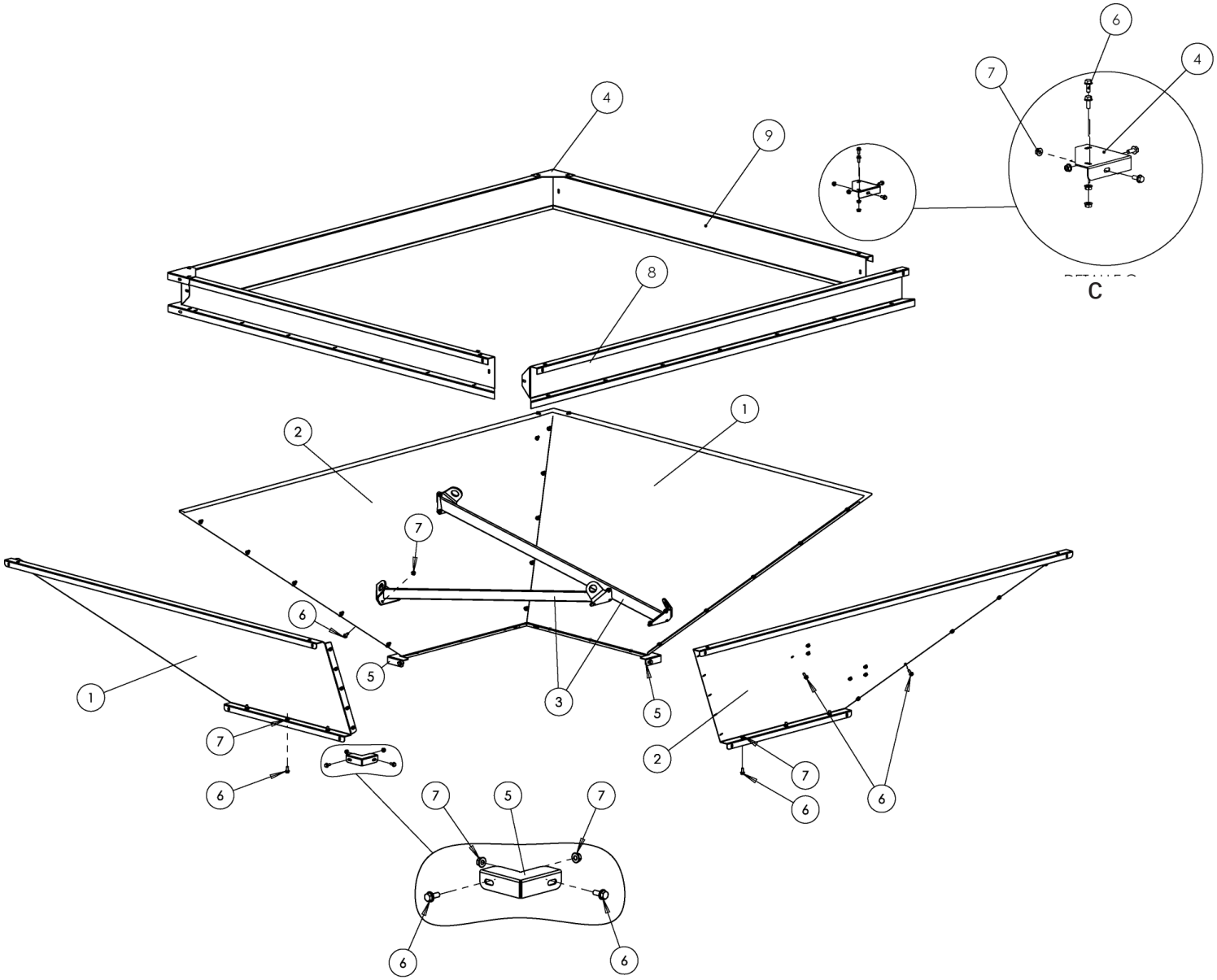

ASSEMBLY # 5 | UPPER HOPPER

#	PART #	DESCRIPTION	QTY.
1	29.52.26452	FRONT STEEL SHEET	2
2	29.52.26451	STEEL SIDE SHEET	2
3	29.39.26455	CROSSBAR	2
4	29.52.26453	UPPER CORNER PLATE	4
5	29.52.26406	LOWER CORNER PLATE	4
6	98.006.079019	G5 5/16" x 3/4" W FLANGE SCREW	68
7	98.305.150079	G5 5/16" W FLANGE NUT	68
8	29.42.26461	SIDE EXTENSIÓN PANEL (OPTIONAL)	1
9	29.42.26462	FRONT EXTENSIÓN PANEL (OPTIONAL)	1

ASSEMBLY # 6 / TRANSMISSION

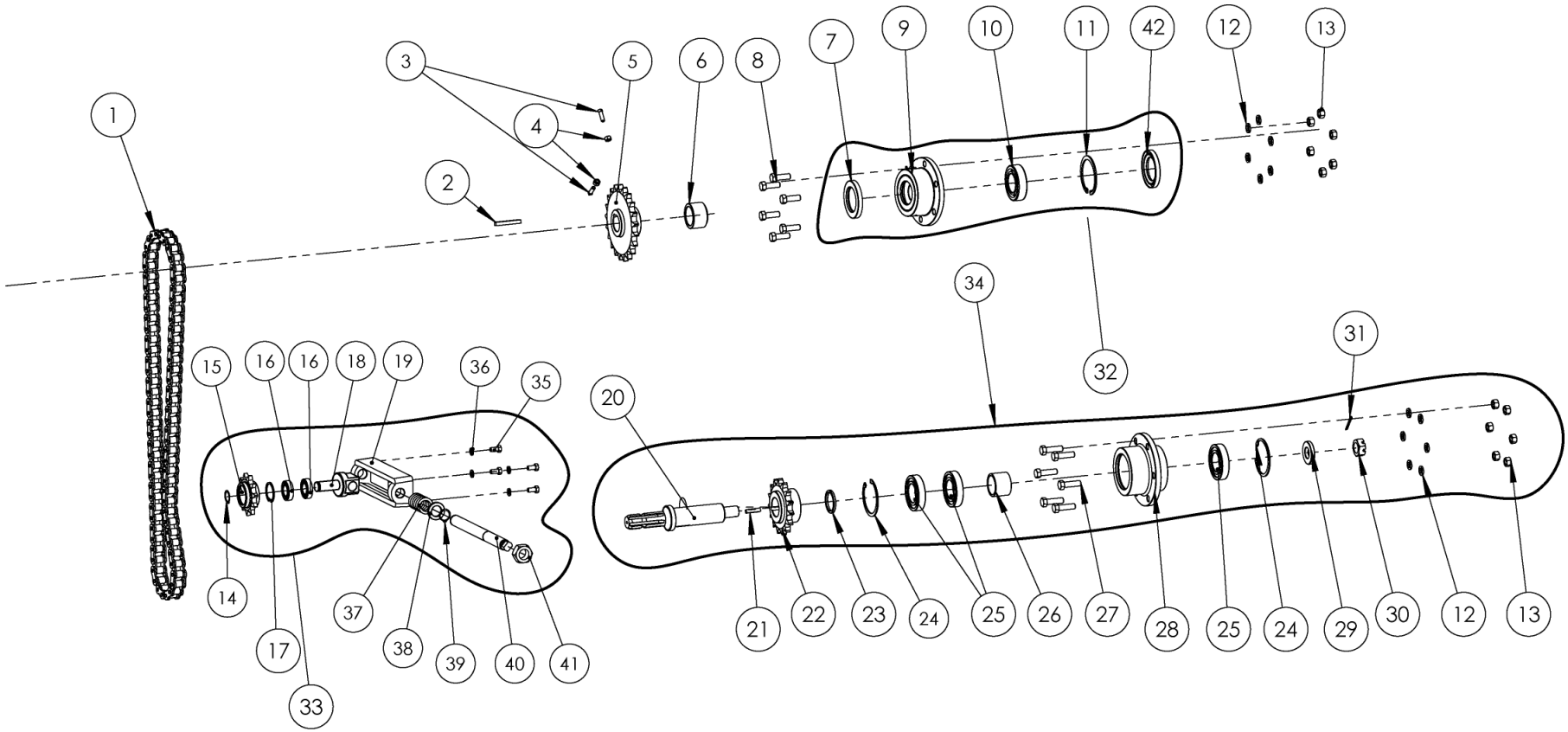

ASSEMBLY # 6 / TRANSMISSION

#	PART #	DESCRIPTION	QTY.
1	99.388.101254	ASA 80 CHAIN – 1"	2mts
2	29.43.25412	INLET SHAFT KEY WITH RELEASE	1
3	98.061.079032	5/16" x 1 1/4" W STUD	2
4	98.301.150079	G5 5/16" W HEXAGONAL NUT	2
5	29.39.26347	INLET GEARWHEEL - Z21 - P 1"	1
6	29.43.26342	BEARING STOP BUSHING	1
7	98.611.176860	SAV/DBH 5278 SEAL	1
8	98.002.127038	G5 1/2" x 1-1/2" W HEX HEAD SCREW	7
9	29.41.26344	FRONT AUGER SUPPORT	1
10	98.713.114545	2309 BEARING	1
11	98.322.001000	RET. RING Ø 100	1
12	98.310.100127	1/2” SPLIT LOCK WASHER	13
13	98.301.150127	G5 1/2" HEX NUT	13
14	98.321.000250	EXT. RET. RING FOR SHAFT Ø 25 mm	1
15	27.43.80195	RED.GBX.-ROLL CHAIN TENSIONER	1
16	98.705.205875	6005 BEARING	1
17	98.322.000470	RET. RING Ø 47	1
18	29.39.26389	SHAFT SUPPORT	1
19	29.41.26381	TENSIONER SUPPORT	1
20	27.43.82535	SPLINED INLET SHAFT	1
21	29.43.25412	KEY FOR Z20 GEAR WHEEL	1
22	27.39.80501	PRIMARY INLET GEAR WHEEL	1
23	29.43.25410	COMPENSATION WASHER	1
24	98.322.000850	RET. RING Ø 85 (2-27/32”)	2
25	98.705.207645	6209 2RS 2 RIGID BALL BEARING	3
26	27.43.80521	SHORT BEARING SPACER BUSHING	1
27	98.002.127044	G5 1/2" x 1-3/4" W HEX HEAD SCREW	6
28	29.41.25402	INLET SHAFT SUPPORT	1
29	29.43.25408	9-MM WASHER Ø26mm(Ø1”x 23/64”)	1
30	98.303.310254	UNF 1"CASTLE NUT H 23.5 mm (15/16”)	1
31	98.334.040050	Ø 4 x 50 mm SPLIT PIN (Ø 5/32” x 2”)	1
32	29.39.26346	AUGER FRONT-SUPPORT ASSEMBLY	1

#	PART #	DESCRIPTION	QTY.
33	29.39.26380	CHAIN TENSIONER	1
34	29.39.26336	INLET SHAFT ASSEMBLY	1
35	98.002.095019	G5 3/8” X 3/4” W HEX HEAD	4
36	98.310.100095	3/8” SPLIT LOCK WASHER	4
37	98.342.026386	TENSIONER SPRING	1
38	29.43.26383	WASHER	1
39	98.321.000250	RET. RING Ø 45	1
40	29.43.26385	STEM	1
41	98.301.150254	G5 1” W HEXAGONAL NUT	1
42	98.611.176960	SAV 7217 - DBH 896 SEAL	1

ASSEMBLY # 7 I TRANSMISSION COVER

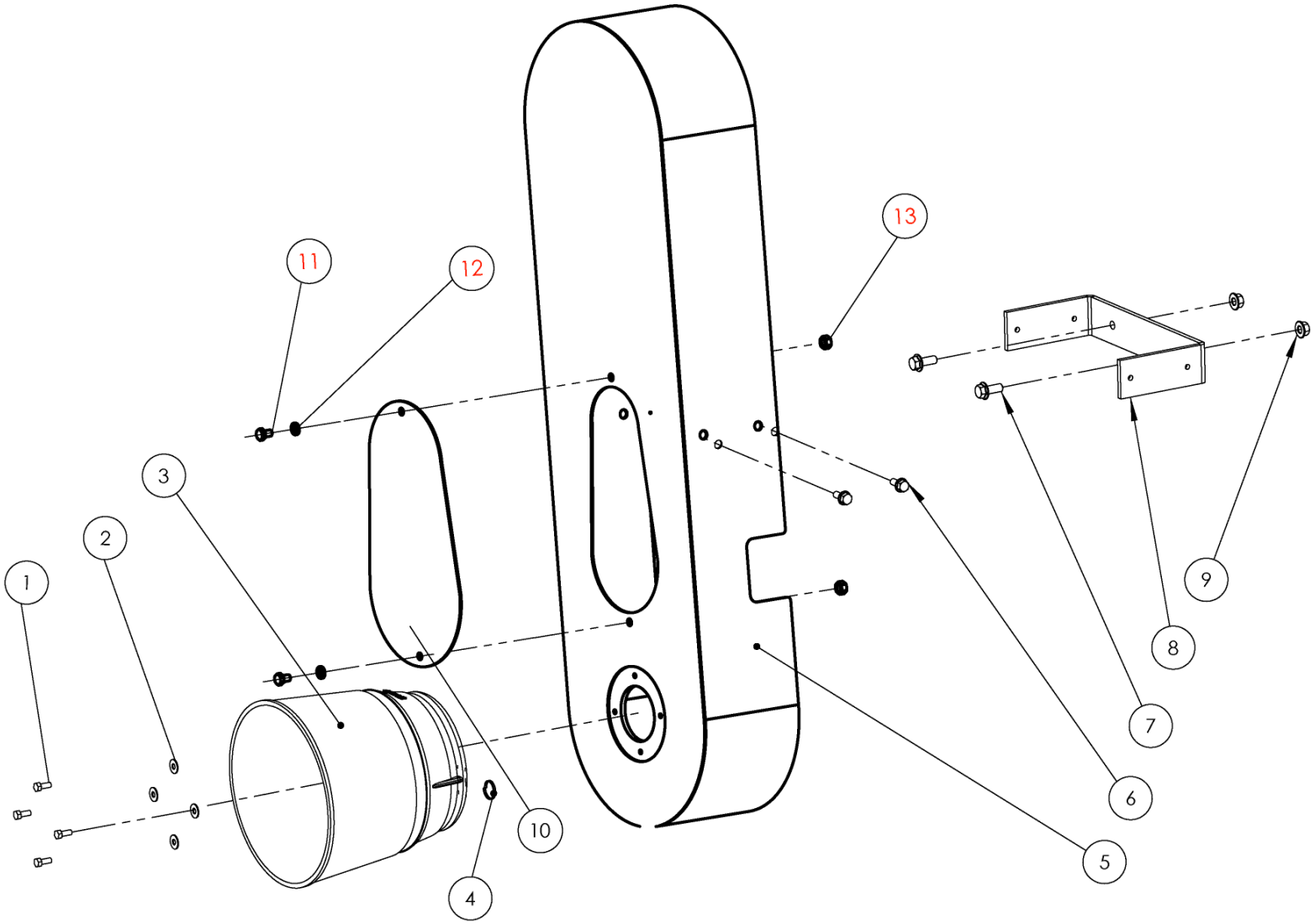

ASSEMBLY # 7 / TRANSMISSION COVER

#	PART #	DESCRIPTION	QTY.
1	98.002.063016	G5 1/4" x 5/8" W HEX HEAD SCREW	4
2	98.309.100063	1/4” FLAT WASHER	4
3	27.39.82508	PTO INLET PROTECTION	1
4	98.328.014220	KEY RING # 20	1
5	29.39.26370	CHAIN COVER	1
6	98.006.079019	G5 5/16" x 3/4" W FLANGE SCREW	4
7	98.006.095025	G5 3/8" x 1" W FLANGE SCREW	2
8	29.43.26332	CHAIN COVER FIXING	1
9	98.305.150095	G5 3/8" W FLANGE NUT	2
10	29.42.26373	FRONT COVER	1
11	98.002.079013	G5 5/16” X 1/2” W HEX HEAD	2
12	98.310.100079	5/16” SPLIT LOCK WASHER	2
13	98.301.121079	G2 5/16 RW ZINC HEX. NUT	2

ASSEMBLY # 8 / WHEELS

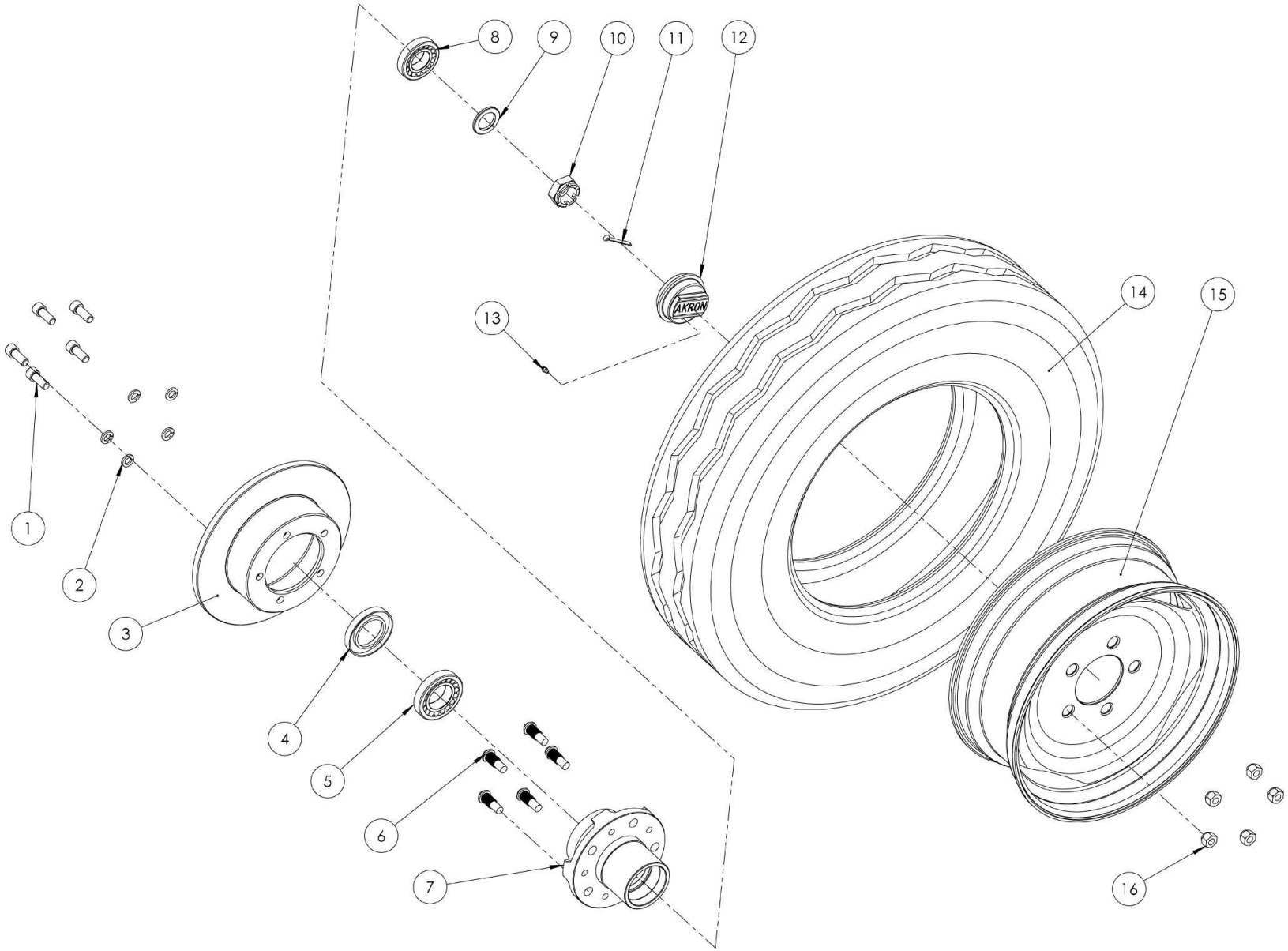

ASSEMBLY # 8 / WHEELS

#	PART #	DESCRIPTION	QTY.
1	98.037.127032	1-1/4" x 1/2" W ALLEN SCREW	5
2	98.310.100127	1/2” SPLIT LOCK WASHER	5
3	29.41.25174	BRAKE DISC	1
4	98.610.175652	DBH 6002 SEAL	1
5	98.730.330945	30209 BEARING	1
6	98.232.127038	1/2" X 1-1/2"NF SCREW FOR HUB	5
7	29.41.25177	WHEEL HUB	1
8	98.730.330735	30207 BEARING	1
9	29.43.25227	WHEEL HUB WASHER	1
10	98.303.311316	1-1/4" x 12 NF CASTLE NUT	1
11	98.334.050060	Ø5 X 60MM SPLIT PIN (Ø 13/64” x 2-3/8”)	1
12	29.41.25175	BRAKE HUB COVER	1
13	98.460.100131	1/4" BSP STRAIGHT GREASE FITTING	1
14	98.662.025226	750 x 16 Ø808 TIRE (2’5-½”x5/8”xØ2’7-13/16”)	1
15	98.397.025225	5-HOLE 750x16x¼" WHL.RIM(2’5-½” x 5/8” x ¼”)	1
16	98.306.350127	½” NF NUT	5

ASSEMBLY # 9 | HYDRAULIC CIRCUIT / BRAKES

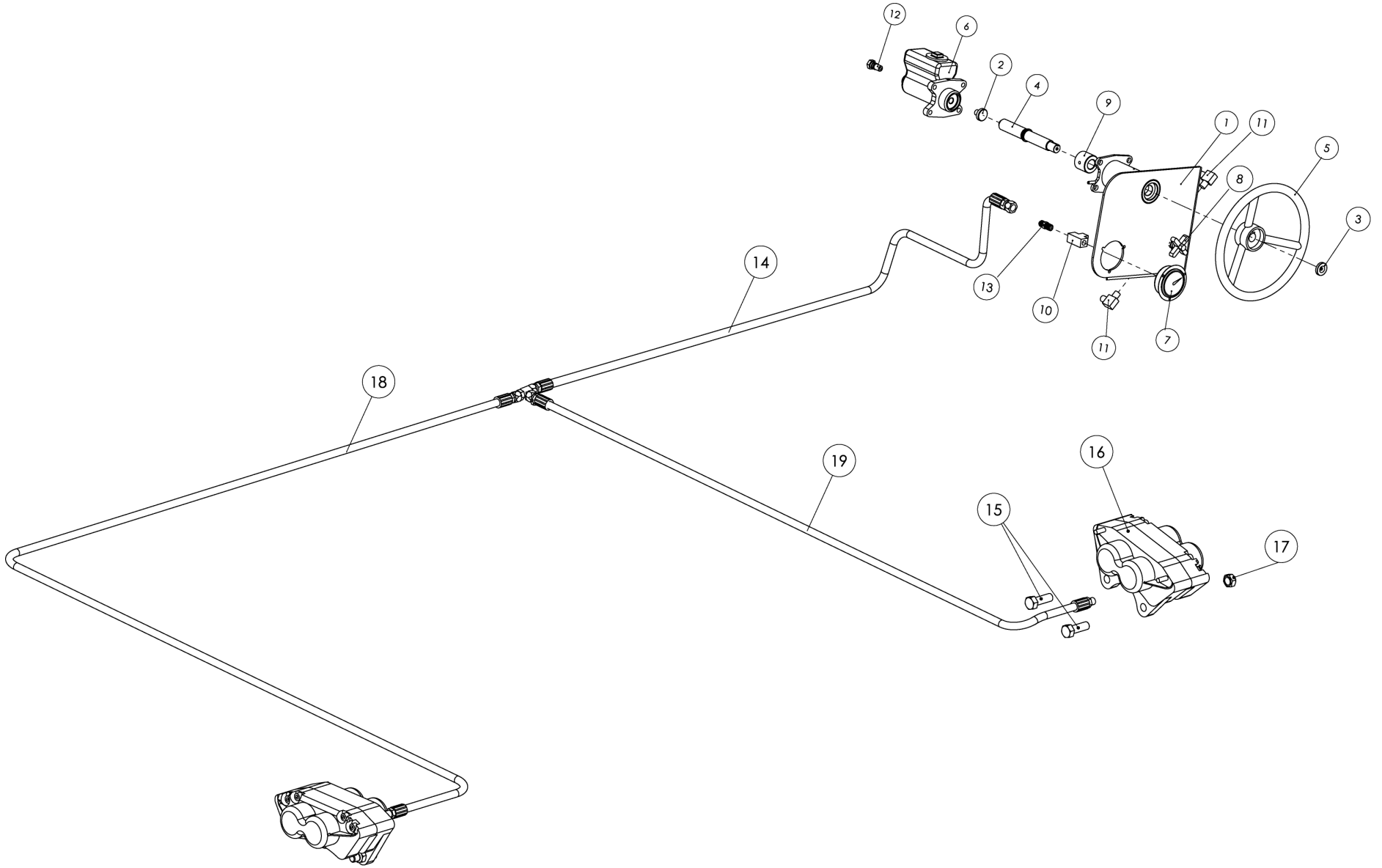

ASSEMBLY # 9 | HYDRAULIC CIRCUIT / BRAKES

#	PART #	DESCRIPTION	QTY.
1	27.39.27801	BRAKE SYSTEM PANEL	1
2	29.43.27806	BRAKE PUMP SUPPLEMENT	1
3	29.43.27807	BRAKE WHEEL COVER	1
4	29.43.27808	BRAKE PUMP SHAFT	1
5	98.408.027809	BRAKE PUMP WHEEL	1
6	98.395.027808	BRAKE PUMP	1
7	98.378.027811	PRESSURE GAUGEL	1
8	98.378.027815	NEEDLE VALVE	1
9	29.43.27804	THREADED BUSHING	1
10	98.378.071985	¼'' BSP FEMALE "T" FITTING	1
11	98.378054501	JIC 37º ELBOW	2
12	29.43.27812	BOLT WITH HOLE	1
13	98.378.060135	¼'' NPT X 9/16'' JIC MALE/MALE ADAPATOR	1
14	27.5627817	PUMP HOSE	1
15	98.002.127038	.G5 1/2x11/2 RW HEX HEAD SCREW	4
16	98.395.025735	BRAKE CLAMP	2
17	98.304.110127	1/2" RW SELF-LOCKING NUT	4
18	27.56.27819	LONG HOSE	1
19	27.56.27818	SHORT HOSE	1

BRAKE CIRCUIT BLEEDING

1- Connect the hose from the calipers to the fittings located behind the brake panel.
(4).

2- Remove the plug (3) and put the brake fluid provided by the manufacturer into the tank.

3- Open the bleed screw of the caliper further from the pump (5)

4- Close the switch valve lever (1) and turn the steering wheel (2) all the way counterclockwise (When performing this action, slowly turn the wheel to allow oil to flow through the circuit).

5- Open the knob (1) and turn the steering wheel (2) all the way.

6- Repeat steps 4 and 5 until there is no sign of air in the fluid flowing through the bleed screw. If after trying this process between 8 and 10 times, no fluid is observed to flow through the bleeder outlet, check that the fittings located behind the brake panel are correctly engaged.

7- Close the bleed screw previously opened and follow steps 4 and 5 detailed above with the other caliper (6).

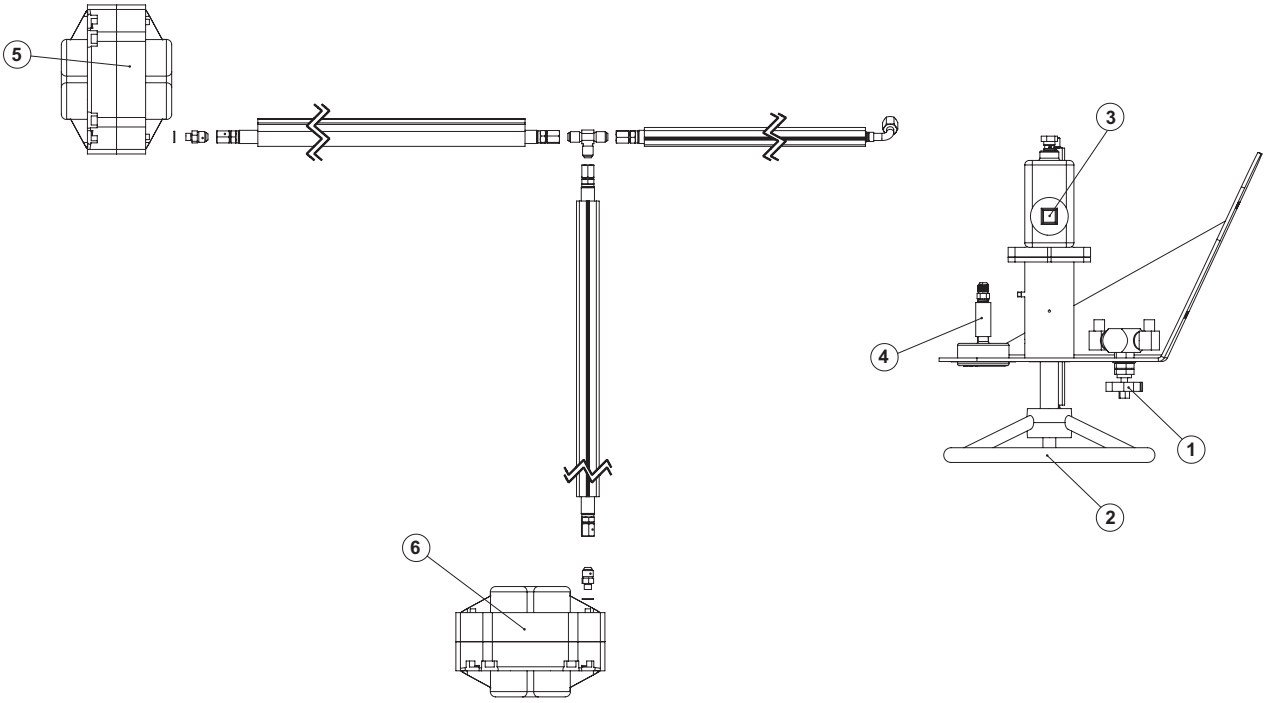

14. PARTS SUBJECT TO NORMAL WEAR AND TEAR:

Ordinary maintenance and spare parts replacement services of the parts detailed below are the equipment owner's exclusive responsibility, therefore, they will not be considered defects in material or manufacturing, but rather defects due to normal wear and tear; improper operation or insufficient equipment maintenance.

- Chains
- Augers
- Bearings
- Articulation Bushings
- Oil
- Wheels
- Sprockets
- Brake System (brake pad ; shoe linings)
- Wear due to grain friction

Parts subject to improper operation or insufficient maintenance.

Using the gearboxes without normal oil level or not complying with the transmission inlet specifications described in the user's manual.

Altering the maximum inlet torque (shear bolt system on PTO).

MACHINE	MAXIMUN ALLOWED INLET TORQUE	PROBABLE CAUSES THAT CAN ALTER THE MAXIMUM ALLOWED TORQUE
E 180 Unloader EXG 300 Unloader E 9250 FH/FHH Bagger E 9250 D Bagger E 9400 D Bagger MAX 14 / 20 /22 / 24 / 6,5 / 8,5 Grain Carts	1860 N/m	Replacing the PTO's shear pin with a different bolt specification. Using a PTO that exceeds the maximum torque allowed by the machine.
MAX 28 / 25 Grain Cart	2130N/m	Replacing the PTO with a PTO with no shear pin device installed.
Vertical MIXER MXR 14	1600 N/m	

Wheel nuts: After around 30 hours of running or after changing a wheel, wheel nuts must be retighten according to the torque values detailed in the manual (9 kgm = 90 Nm = 65 ft lbs. pie -point 7.g). Special care should be taken to the wheel nuts tightening if the machine has moved over paths or roads. Failure to follow these instructions may cause rim damage or lost of it.

15. USER'S NOTES

AKRON

Rosario de Santa Fe 2256 – X2400EFN San Francisco CBA

Tel./Fax: + 54 3564 - 435900 - Toll- free: 0 800 333 8300

e-mail: export@akron.com.ar - www.akron.com.ar